MECHANICAL SYMBOL LIST

NOTE: THIS IS A MASTER SCHEDULE. NOT ALL SYMBOLS CONTAINED HEREIN MAY APPEAR ON THE DRAWINGS.

	ITEM TO BE REMOVED
	POINT OF CONNECTION/DISCONNECTION
#	SHEET NOTE
#	REVISION NUMBER
TAG / UNIT	EQUIPMENT MARK
TAG / CFM	DIFFUSER TAG
	ACCESS PANEL
	SUPPLY AIR DUCT UP/DOWN
	RETURN AIR DUCT UP/DOWN
	EXHAUST AIR DUCT UP/DOWN
	RETURN GRILLE
	EXHAUST GRILLE
	4-WAY BLOW SUPPLY DIFFUSER
	3-WAY BLOW SUPPLY DIFFUSER
	2-WAY BLOW SUPPLY DIFFUSER
	1-WAY BLOW SUPPLY DIFFUSER
	AIRFLOW DIRECTION
--"Ø	ROUND DUCTWORK (INCHES)
--"X--"	RECTANGULAR DUCTWORK (INCHES)
	ROUND FLEXIBLE DUCT
	SQUARE TO ROUND TRANSITION
	SINGLE LINE RIGID DUCT
	SINGLE LINE RIGID DUCT (ACOUSTICALLY LINED)
	DOUBLE LINE RIGID DUCT
	DOUBLE LINE RIGID DUCT (ACOUSTICALLY LINED)
	EXISTING DUCTWORK
	FIRE DAMPER
	SMOKE DAMPER
	FIRE/SMOKE DAMPER
	MOTORIZED DAMPER (OPPOSED BLADE TYPE)
	MOTORIZED DAMPER (PARALLEL BLADE TYPE)
	BACKDRAFT DAMPER
	MANUAL VOLUME DAMPER
RVD	REMOTE VOLUME DAMPER
SD	SMOKE DETECTOR
T	THERMOSTAT
H	HUMIDISTAT
S	SENSOR
CO	CARBON DIOXIDE SENSOR
CO	CARBON MONOXIDE SENSOR
U	DOOR UNDERCUT
FS	FLOW SWITCH

CHR	CHILLED WATER RETURN PIPING
CHS	CHILLED WATER SUPPLY PIPING
CR	CONDENSER WATER RETURN PIPING
CS	CONDENSER WATER SUPPLY PIPING
HWR	HEATING WATER RETURN PIPING
HWS	HEATING WATER SUPPLY PIPING
RL	REFRIGERANT LIQUID PIPING
RS	REFRIGERANT SUCTION PIPING
CD	CONDENSATE DRAIN PIPING
PC	PUMPED CONDENSATE DRAIN PIPING
	CIRCUIT SETTER
	2-WAY ELECTRONIC CONTROL VALVE
	3-WAY ELECTRONIC CONTROL VALVE
	2-WAY PNEUMATIC CONTROL VALVE
	3-WAY PNEUMATIC CONTROL VALVE
	SOLENOID VALVE
	BUTTERFLY VALVE
	PLUG VALVE
	BALL VALVE
	CHECK VALVE
	GATE VALVE
	HOSE END DRAIN VALVE
	PRESSURE REDUCING VALVE
	RELIEF VALVE
	TEMPERATURE PRESSURE RELIEF VALVE
	THERMOMETER
	PRESSURE GAUGE WITH GAUGE COCK
	MANUAL AIR VENT
	PRESSURE TEMPERATURE PORT
	Y-STRAINER WITH BLOWDOWN
	PIPE GUIDE
	UNION
	PIPE ANCHOR
	FLEXIBLE CONNECTOR
	PIPE CAP/STUB-OUT
	DIRECTION OF FLOW
	PIPE DOWN
	PIPE UP
	PIPE TEE UP
	PIPE TEE DOWN

MECHANICAL ABBREVIATIONS

NOTE: THIS IS A MASTER SCHEDULE. NOT ALL ABBREVIATIONS CONTAINED HEREIN MAY APPEAR ON THE DRAWINGS.

AABC	AMERICAN AIR BALANCE COUNCIL
ACD	AUTOMATIC CONTROL DAMPER
AFF	ABOVE FINISHED FLOOR
AP	ACCESS PANEL
ASHRAE	AMERICAN SOCIETY OF HEATING, REFRIGERATION, AND AIR CONDITIONING ENGINEERS
ASPE	AMERICAN SOCIETY OF PLUMBING ENGINEERS
BFD	BACKFLOW PREVENTION DEVICE
BFF	BELOW FINISHED FLOOR
BHP	BRAKE HORSE POWER
BTUH	BRITISH THERMAL UNIT PER HOUR
CFM	CUBIC FEET PER MINUTE
CHAR	CHARACTERISTICS
CHR	CHILLED WATER RETURN
CHS	CHILLED WATER SUPPLY
CR	CONDENSER WATER RETURN
CS	CONDENSER WATER SUPPLY
D	DRAIN
DB	DRY BULB TEMPERATURE
DDC	DIRECT DIGITAL CONTROL
DIA	DIAMETER
DN	DOWN
DX	DIRECT EXPANSION
(E)	EXISTING TO REMAIN
EA	EXHAUST AIR
EAT	ENTERING AIR TEMPERATURE
EER	ENERGY EFFICIENCY RATIO
EFF	EFFICIENCY
ELEC	ELECTRICAL
ESP	EXTERNAL STATIC PRESSURE
EWT	ENTERING WATER TEMPERATURE
°F	FAHRENHEIT
FD	FIRE DAMPER
FPM	FEET PER MINUTE
FSD	FIRE/SMOKE DAMPER
GA	GAGE OR GAUGE
GAL	GALLONS
GPM	GALLONS PER MINUTE
GR	GLYCOL RETURN
GS	GLYCOL SUPPLY
HD	HEAD
HP	HORSEPOWER
HR	HOUR
HSPF	HEATING SEASONAL PERFORMANCE FACTOR
HWR	HEATING HOT WATER RETURN
HWS	HEATING HOT WATER SUPPLY
IBC	INTERNATIONAL BUILDING CODE
IMC	INTERNATIONAL MECHANICAL CODE
IPC	INTERNATIONAL PLUMBING CODE
KW	KILOWATT
LAT	LEAVING AIR TEMPERATURE
LBS	POUNDS
LWT	LEAVING WATER TEMPERATURE
MAX	MAXIMUM
MBH	ONE THOUSAND BTUH
MCA	MINIMUM CIRCUIT AMPS
MIN	MINIMUM
MOCP	MAXIMUM OVER CURRENT PROTECTION
MVD	MANUAL VOLUME DAMPER
N/A	NOT APPLICABLE
NC	NORMALLY CLOSED
NEBB	NATIONAL ENVIROMENTAL BALANCING BUREAU
NEC	NATIONAL ELECTRIC CODE
NFPA	NATIONAL FIRE PROTECTION ASSOCIATION
NIC	NOT IN CONTRACT
NO	NORMALLY OPEN
NTS	NOT TO SCALE
OA	OUTSIDE AIR
OAT	OUTSIDE AIR TEMPERATURE
OBD	OPPOSED BLADE DAMPER
OED	OPEN END DUCT
OFCI	OWNER FURNISHED, CONTRACTOR INSTALLED
PD	PRESSURE DROP
PRV	PRESSURE REDUCING VALVE
PSI	POUNDS PER SQUARE INCH
PSIA	POUNDS PER SQUARE INCH ABSOLUTE
PSID	POUNDS PER SQUARE INCH DIFFERENTIAL
PSIG	POUNDS PER SQUARE INCH GAUGE
(R)	EXISTING TO BE RELOCATED
RA	RETURN AIR
RH	RELATIVE HUMIDITY
RL/S	REFRIGERANT LIQUID/SUCTION
RPM	REVOLUTIONS PER MINUTE
RPPA	REDUCED PRESSURE PRINCIPAL ASSEMBLY
RVD	REMOTE VOLUME DAMPER
SA	SUPPLY AIR
SD	SMOKE DAMPER
SEER	SEASONAL ENERGY EFFICIENCY RATIO
"SP	STATIC PRESSURE (INCHES OF)
SPECS	SPECIFICATIONS
SQ	SQUARE
SQFT	SQUARE FEET
SS	STAINLESS STEEL
T	TEMPERATURE
TAB	TEST AND BALANCE WORK AND REPORT
TSP	TOTAL STATIC PRESSURE
TYP	TYPICAL
UBC	UNIFORM BUILDING CODE
UMC	UNIFORM MECHANICAL CODE
UON	UNLESS OTHERWISE NOTED
UPC	UNIFORM PLUMBING CODE
V/PH/HZ	VOLTAGE/PHASE/HERTZ
VFD	VARIABLE FREQUENCY DRIVE
WB	WET BULB TEMPERATURE
WG	WATER GAUGE
WMS	WIRE MESH SCREEN
(X)	EXISTING TO BE REMOVED

DRAWING INDEX

SHEET NUMBER	SHEET TITLE	PERMIT SET DATE: 05/24/2021	* *	* *	* *	* *
M000	SYMBOL LIST AND ABBREVIATIONS	●				
M001	SPECIFICATIONS	●				
M002	SCHEDULES	●				
M003	DIAGRAMS	●				
M004	COMPLIANCE CERTIFICATE	●				
MD100	MECHANICAL DEMOLITION PLAN	●				
MD400	MECHANICAL DEMOLITION SECOND FLOOR - LOW ROOF PLAN	●				
M100	MECHANICAL PLAN	●				
M300	MECHANICAL PIPING PLAN	●				
M400	MECHANICAL SECOND FLOOR - LOW ROOF PLAN	●				
	TOTAL	10				

Dustin Hart, P.E.

Digitally signed by Dustin Hart, P.E.
DN: C=US, E=dhart@msa-ec.com, O=MSA Engineering Consultants, OU=Mechanical Engineer, CN="Dustin Hart, P.E."
Reason: I am the author of this document
Contact Info: 702-896-1100
Date: 2021.06.24 07:29:38-07'00'

PROFESSIONAL ENGINEER - STATE OF NEVADA
DUSTIN T. HART
Exp: 6/30/2023
MECHANICAL
NO. 24369

MAY 24 2021

msa.
ENGINEERING CONSULTANTS
370 E Windmill Lane, Suite 100
Las Vegas, NV 89123
702.896.1100
msa-ec.com

MSA #L20211

IZ design studio
design...sustainability...architecture.

tel. 702.441.0026
Fax. 702.475.4755
www.izdesignstudio.com

7229 W. Sahara Ave Suite 100
Las Vegas, NV 89117

SYMBOL LIST AND ABBREVIATIONS
Southern Nevada Health District
SNHD LAB EXPANSION
700 South Martin Luther King Blvd.
Las Vegas, Nevada 89106

Sheet Name

Project Name

DELTA NO.	REVISION NO.	DESCRIPTION	DATE

Project Number	20427
Date	05/24/2021
Drawn By	MSA
Checked By	PE

M000

MECHANICAL SPECIFICATIONS

PART ONE - GENERAL

1. THE OWNER HAS CONTRACT LANGUAGE THAT NEEDS TO BE READ PRIOR TO BID SUBMISSION AS THERE ARE ITEMS THAT MAY SUPPLEMENT OR SUPERSEDE ITEMS NOTED HEREIN. THE OWNER'S CONTRACT DOCUMENTS HAS INFORMATION ON HOW WORK IS TO BE PERFORMED, HOW DOCUMENT SUBMITTALS ARE PROVIDED, RECORD DOCUMENTS ARE SUBMITTED, ETC. SEE THE ARCHITECTURAL DOCUMENTS FOR ADDITIONAL DIVISION 1 INFORMATION.
2. CODE USED IN DESIGN: IBC 2018, UMC-2018, UPC-2018, IECC-2018
3. ALL WORK SHALL BE DONE IN ACCORDANCE WITH THE LATEST ADOPTED EDITIONS OF THE APPLICABLE INTERNATIONAL BUILDING CODE (IBC), LOCAL MECHANICAL CODE (UMC, IMC, ETC.), LOCAL PLUMBING CODE (UPC, IPC, ETC.), NATIONAL ELECTRIC CODES (NEC) AND ALL OTHER APPLICABLE FEDERAL, STATE, AND LOCAL REGULATIONS.
4. THE CONTRACTOR MUST ARRANGE A VISIT TO THE WORK SITE PRIOR TO BID SUBMISSION TO FULLY UNDERSTAND THE EXISTING CONDITIONS. THE DRAWINGS ARE DIAGRAMMATIC AND SHOW THE WORK INTENT BUT NOT NECESSARILY ALL EXISTING OBSTRUCTIONS, PIPE OR DUCT BENDS. DETERMINING SITE CONDITIONS AND ADJUSTING THE INSTALLATION IS THE RESPONSIBILITY OF THE CONTRACTOR
5. THE CONTRACTOR SHALL PROVIDE THE WORK SHOWN ON THE DRAWINGS AND SPECIFIED FOR THEIR INDIVIDUAL SECTIONS OF WORK. THE WORD "WORK" SHALL MEAN ALL LABOR, TRANSPORTATION, MATERIAL, EQUIPMENT, TOOLS, INSTALLATION, SUPERVISION AND ANY OTHER INCIDENTAL ITEMS OR SERVICES NECESSARY FOR THE PROPER INSTALLATION AND OPERATION OF THE COMPLETE SYSTEMS, WHICH SHALL BE PROVIDED WHETHER OR NOT SPECIFICALLY INDICATED OR NOTED.
6. ALL GENERAL CONDITIONS, SPECIAL REQUIREMENTS OR GENERAL REQUIREMENTS OF THE CONSTRUCTION SPECIFICATIONS ARE MADE PART OF THIS SPECIFICATION AND HAVE THE SAME FORCE AND AFFECT AS IF COMPLETELY REPRODUCED.
7. THE WORD "PROVIDE" SHALL MEAN FURNISH AND INSTALL, MAKE ALL FINAL CONNECTIONS AND LEAVE IN AN APPROVED COMPLETE OPERATING CONDITION.
8. THE CONTRACTOR SHALL BE RESPONSIBLE FOR PAYING ALL FEES AND OBTAINING ALL PERMITS AND INSPECTIONS REQUIRED FOR THE WORK.
9. THE CONTRACTOR SHALL CAREFULLY EXAMINE ALL CONTRACT DOCUMENTS. THE CONTRACTOR SHALL COORDINATE THE WORK WITH ALL OTHER TRADES INCLUDING, BUT NOT LIMITED TO, THE CONTRACT DOCUMENTS, SHOP DRAWINGS, ETC. FOR ALL GENERAL CONSTRUCTION, STRUCTURAL, MECHANICAL, ELECTRICAL AND SPECIALTY CONTRACTOR WORK. THE CONTRACTOR SHALL BE RESPONSIBLE FOR THE PROPER FITTING OF MATERIAL INTO THE BUILDING AS PLANNED, WITHOUT INTERFERENCE WITH OTHER WORK, AND SHALL MAKE REASONABLE MODIFICATIONS IN THE LAYOUTS NEEDED TO PREVENT CONFLICT WITH OTHER TRADES, TO PROVIDE ACCESS AND FOR THE PROPER EXECUTION OF THE WORK.
10. DRAWINGS ARE DIAGRAMMATIC AND SCHEMATIC IN NATURE, AND INDICATE THE TYPE, SIZE, ARRANGEMENT AND LOCATION OF MATERIALS AND EQUIPMENT. WORK INCLUDES CERTAIN COMPONENTS, APPURTENANCES AND RELATED SPECIALTIES THAT MAY NOT BE SHOWN. CONTRACTOR SHALL PROVIDE ALL NECESSARY ITEMS TO COMPLETE THE WORK ACCORDING TO INDUSTRY STANDARDS. IT IS THE INTENT OF THE DRAWINGS AND SPECIFICATIONS TO CALL OUT FOR FINISHED WORK, TESTED AND READY FOR OPERATION. DO NOT SCALE DRAWINGS. ARRANGEMENT OF EQUIPMENT AND ROUTING OF PIPES AND DUCTWORK, ETC. INDICATED ON DRAWINGS SHALL BE ROUTED PLUMB AND AT RIGHT ANGLES TO BUILDING CONSTRUCTION AND MAY REQUIRE MODIFICATION DUE TO UNFORESEEN CONDITIONS AND REQUIRE ON SITE REVISIONS DURING CONSTRUCTION. (SEE ALSO "BIDDING").
11. ALL WORK REQUIRED FOR IDENTICAL/SIMILAR ITEMS SHOWN ON THE DRAWINGS SHALL BE PROVIDED, ALTHOUGH EACH SPECIFIC IDENTICAL/SIMILAR ITEM MAY NOT BE SHOWN IN DETAIL.
12. THE CONTRACTOR SHALL SUBMIT ELECTRONIC PDF SHOP DRAWINGS AND TECHNICAL DATA SHEETS FOR ALL EQUIPMENT AND MATERIALS SPECIFIED HEREIN TO THE ENGINEER. THE ENGINEER SHALL REVIEW SHOP DRAWINGS AND TECHNICAL DATA SHEETS FOR CONFORMANCE WITH THE CONTRACT DOCUMENTS AND ISSUE A WRITTEN ASSESSMENT TO THE OWNER PRIOR TO COMMENCEMENT OF WORK.
13. SPECIFIED EQUIPMENT SHALL BE CONSIDERED BASE BID. ANY APPROVED ALTERNATE MANUFACTURERS PRODUCT SHALL BE LISTED AS A FEE ADDITION/REDUCTION AS A SEPARATE LINE ITEM AT BID. A WRITTEN DESCRIPTION OF PRODUCT DIFFERENCES MUST BE PROVIDED FOR EVALUATION OR THE ALTERNATE PRODUCT WILL BE REJECTED. THE REQUIREMENTS OF PARA. 14.1 BELOW APPLIES TO PRE-APPROVED ALTERNATE MANUFACTURER EQUIPMENT. THE CONTRACTOR SHALL BE RESPONSIBLE FOR ALL ENGINEERING FEES NECESSARY TO CHANGE PERMIT DOCUMENTS BASED ON ALTERNATE SUBMITTAL PACKAGES/EQUIPMENT SUBSTITUTIONS.
14. ALL SUBSTITUTIONS SHALL BE SUBMITTED TO THE ENGINEER FOR CONSIDERATION PRIOR TO BIDDING. THE PROPOSED SUBSTITUTE PRODUCT SHALL BE LISTED AS A FEE ADDITION/REDUCTION. A WRITTEN DESCRIPTION OF PRODUCT AND INSTALLATION DIFFERENCES MUST BE PROVIDED FOR EVALUATION OR THE SUBSTITUTE PRODUCT WILL BE REJECTED. THE OWNER'S REPRESENTATIVE SHALL PRE-APPROVE ANY PROPOSED SUBSTITUTION IN WRITING. IF APPROVED, THE PRODUCT FALLS UNDER THE RULES OF PARA. 13 ABOVE.
   - 14.1. THE CONTRACTOR SHALL BE RESPONSIBLE FOR COORDINATING ALL REQUIREMENTS ASSOCIATED WITH SUBSTITUTED EQUIPMENT OR MATERIALS WITH OTHER BUILDING TRADES, INCLUDING, BUT NOT LIMITED TO, ELECTRICAL, STRUCTURAL, OR ARCHITECTURAL ELEMENTS. SUBSTITUTED EQUIPMENT, ANYTHING DIFFERENT FROM SPECIFIED ON THE DOCUMENTS, MUST BE IDENTIFIED AS SUCH DURING THE SUBMITTAL PROCESS. THE CONTRACTOR SHALL IDENTIFY AND ANNOTATE ALL REVISED REQUIREMENTS PER BUILDING TRADE ON THE SHOP DRAWINGS. THE CONTRACTOR SHALL ALSO IDENTIFY ALL COSTS, DEBITS OR CREDITS, IN WRITING FOR THE PROPOSED CHANGES PER BUILDING TRADE.
15. SHOP DRAWING REVIEW DOES NOT RELIEVE THE CONTRACTOR FROM BASE BID, ALTERNATE OR SUBSTITUTE EQUIPMENT COORDINATION REQUIREMENTS.
16. UPON COMPLETION OF CONSTRUCTION,
   - 16.1. THE CONTRACTOR SHALL SUPPLY THE ENGINEER WITH AN ELECTRONIC CAD AND PDF SET OF AS-BUILT DOCUMENTS ACCURATELY SHOWING THE MATERIALS AND EQUIPMENT AS INSTALLED.
   - 16.2. THE CONTRACTOR SHALL PROVIDE THE BUILDING OWNER OR REPRESENTATIVE WITH AN ELECTRONIC (PDF) MANUAL WITH DETAILED OPERATING AND MAINTENANCE INSTRUCTIONS FOR EACH PIECE OF EQUIPMENT PROVIDED, WITH CONTENT MEETING THE REQUIREMENTS NOTED BELOW:
     - 16.2.1. SUBMITTAL DATA STATING EQUIPMENT SIZE AND SELECTED OPTIONS.
     - 16.2.2. MANUFACTURER'S OPERATION MANUALS AND MAINTENANCE MANUALS. REQUIRED ROUTINE MAINTENANCE ACTIONS SHALL BE CLEARLY IDENTIFIED.
     - 16.2.3. NAME, ADDRESS AND CONTACT NUMBER FOR AT LEAST ONE SERVICE AGENCY.
     - 16.2.4. HVAC AND SERVICE HOT WATER CONTROLS SYSTEM MAINTENANCE AND CALIBRATION INFORMATION, INCLUDING WIRING DIAGRAMS, SCHEMATICS AND CONTROL SEQUENCE DESCRIPTIONS. DESIRED OR FIELD DETERMINED SET-POINTS SHALL BE PERMANENTLY RECORDED ON A CONTROLS DRAWING AT CONTROL DEVICES OR IN SYSTEM PROGRAMMING INSTRUCTIONS.
     - 16.2.5. A NARRATIVE OF HOW EACH SYSTEM IS INTENDED TO OPERATE, INCLUDING RECOMMENDED SET-POINTS.
     - 16.2.6. COPIES OF GUARANTIES AND/OR WARRANTIES.
17. ALL MATERIALS AND WORKMANSHIP SHALL BE GUARANTEED FOR A MINIMUM OF ONE (1) YEAR FROM DATE OF ACCEPTANCE BY OWNER. REFRIGERATION COMPRESSORS SHALL BE GUARANTEED FOR A MINIMUM OF FIVE (5) YEARS FROM DATE OF OWNER'S ACCEPTANCE. IN ADDITION, THE CONTRACTOR SHALL GUARANTEE THAT THE INSTALLATION WHEN OPERATED IN ACCORDANCE WITH THE CONTRACTOR'S INSTRUCTIONS WILL DEVELOP CAPACITY AND CHARACTERISTICS AS SPECIFIED AND WILL FULFILL EACH AND EVERY REQUIREMENT OF THE DRAWINGS AND SPECIFICATIONS. SHOULD THE INSTALLATION IN ANY WAY FAIL TO DO SO, THE CONTRACTOR WILL, WITHOUT DELAY AND WITHOUT COST TO THE OWNER, PROVIDE WHATEVER ADDITIONAL EQUIPMENT, MATERIAL, AND LABOR REQUIRED TO CORRECT THE DEFICIENCY AND COMPLY WITH THE REQUIREMENTS OF THE DRAWINGS AND SPECIFICATIONS.
18. CONTRACTOR SHALL CHECK AND VERIFY ALL SIZES, DIMENSIONS, AND CONDITIONS BEFORE STARTING ANY WORK. ANY DEVIATIONS OR PROBLEMS SHALL BE TRANSMITTED TO THE ENGINEER FOR REVIEW.
19. PROVIDE BASE AND COUNTER FLASHING FOR ITEMS PENETRATING THE ROOF OR EXTERIOR WALLS.
20. STARTERS, VFDs DISCONNECT SWITCHES AND CONTROLS FOR MOTORS IF NOT UNIT MOUNTED AND/OR SUPPLIED BY THE EQUIPMENT MANUFACTURER, UNLESS NOTED SPECIFICALLY OTHERWISE SHALL FOLLOW:
   - 20.1. VFDs TO BE SUPPLIED BY THE MECHANICAL CONTRACTOR AND INSTALLED BY THE ELECTRICAL CONTRACTOR. FINAL LOCATIONS COORDINATED WITH THE ENGINEER. WIRING BETWEEN THE VFD AND THE MOTOR SHALL BE SHIELDED POWER CABLE DESIGNED FOR VFD APPLICATIONS, GROUNDED AT BOTH ENDS.
   - 20.2. UNLESS NOTED OTHERWISE, LOOSE MOTOR STARTERS, COMBINATION STARTERS, DISCONNECT SWITCHES, MOTOR RATED SWITCHES, TOGGLE SWITCHES, ETC. TO BE SUPPLIED AND INSTALLED BY THE ELECTRICAL CONTRACTOR.
   - 20.3. CONTROL AND INTERLOCKING WIRING SHALL BE FURNISHED AND INSTALLED BY CONTRACTOR PERFORMING CONTROLS WORK. (SEE AUTOMATIC TEMPERATURE CONTROLS SECTION FOR ADDITIONAL INFORMATION WITH REGARD TO THIS WIRING RULE.)
21. ALL WORK SHOWN IS NEW UNLESS NOTED OTHERWISE.
22. MAINTAIN OCCUPANCY AND FIRE WALL SEPARATION INTEGRITY AS REQUIRED. REFER TO ARCHITECTURAL PLANS FOR LOCATIONS OF ALL OCCUPANCY/FIREWALL SEPARATIONS AND SPECIFIC DETAILS FOR CONSTRUCTION. PROVIDE ALL NECESSARY FIRE AND SMOKE FIRE DAMPERS, ACCESS DOORS, CAULKING, ETC. FOR APPROVED INSTALLATION.
23. IECC COMPLIANCE: THE CONTRACTOR IS RESPONSIBLE FOR COMPLYING WITH AND PERFORMING ALL REQUIREMENTS AND WORK SET FORTH IN THE IECC COMPLIANCE CERTIFICATE THAT IS INCLUDED IN THESE DOCUMENTS.

BIDDING

1. THE CONTRACTOR SHALL VISIT THE SITE PRIOR TO SUBMITTING A BID TO BECOME FAMILIAR WITH THE EXISTING CONDITIONS. THE CONTRACTOR SHALL COMPARE THE WORK SPECIFIED IN THE CONTRACT DOCUMENTS WITH THE EXISTING CONDITIONS. THE CONTRACTOR SHALL IDENTIFY AND NOTATE ALL WORK OR CONDITIONS THAT ARE DIFFERENT FROM THE CONTRACT DOCUMENTS OR THEIR INTENT. THE CONTRACTOR SHALL, UPON DISCOVERY, IMMEDIATELY NOTIFY AND REPORT, IN WRITING, ANY DISCREPANCIES TO THE ENGINEER. NO EXTRAS OR CHANGE ORDERS WILL BE ALLOWED FOR FAILURE TO PERFORM THE PRE-BID SITE VISIT.
2. BASE PROPOSAL ON MANUFACTURER NAMES LISTED UNLESS "OR EQUAL" IS INDICATED. PROVIDE SUBSTITUTION REQUESTS A MINIMUM OF FIVE (5) BUSINESS DAYS PRIOR TO BID DATE CLOSING TO ALLOW TIME FOR DUE CONSIDERATION OF PROPOSED ALTERNATE. DETERMINATION OF SUBSTITUTION OF EQUALITY RESTS SOLELY WITH THE ENGINEER.

PART TWO - PRODUCTS

HVAC EQUIPMENT

1. PROVIDE HVAC EQUIPMENT AS SPECIFIED AND/OR SCHEDULED HEREIN AND IN ACCORDANCE WITH MANUFACTURER'S PUBLISHED INSTALLATION INSTRUCTIONS. EQUIPMENT SHALL OPERATE ACCORDING TO THE MANUFACTURER'S "OWNER'S OPERATING AND MAINTENANCE MANUAL" TROUBLE-FREE PRIOR TO STARTING TEST AND BALANCE (TAB) WORK.

DUCTWORK

1. DUCTWORK, UNLESS LISTED OTHERWISE IN THIS SECTION, SHALL BE ASTM A653/A653M GALVANIZED SHEET METAL, LOCK-FORMING QUALITY HAVING A ZINC COATING OF 0.90 OZ PER SQ. FT. (G90) EQUALLY APPLIED TO EACH SURFACE, TESTED PER ASTM A90. DUCTWORK IS TO BE INSTALLED ACCORDING TO ASHRAE RECOMMENDATIONS AND SMACNA DUCT CONSTRUCTION STANDARDS. NO SHEETMETAL DUCTWORK TO BE LESS THAN 26 GA.
2. ROUND DUCTWORK: 8"Ø AND UNDER CAN BE SPIRAL OR SNAP-LOCK, >8"Ø TO BE SPIRAL CONSTRUCTION.
3. PROVIDE MANUAL VOLUME DAMPERS WITH LOCKING QUADRANTS AND IDENTIFYING RIBBONS AT DAMPER HANDLES FOR AIR BALANCING EACH BRANCH DUCT TAKE-OFF OR PIECE OF AIR DISTRIBUTION EQUIPMENT. NOT ALL DAMPERS MAY BE INDICATED ON THE DOCUMENTS.
4. SEAL ALL DUCT PENETRATIONS THROUGH WALLS, FLOOR AND ROOF. SEAL ALL TRANSVERSE DUCT SEAMS WITH APPROVED MASTIC. DUCT TAPES SHALL NOT BE ALLOWED FOR RIGID DUCTWORK.
5. SUPPLY, OUTSIDE AIR AND RETURN DUCTWORK SHALL BE INSULATED WITH FLEXIBLE GLASS FIBER INSULATION MEETING ANSI/ASTM C612, MAXIMUM 'K' VALUE OF 0.29 AT 75°F, WITH FOIL-KRAFT FLAME RESISTANT VAPOR BARRIER, MINIMUM 3/4 #/CUFT. DENSITY. BELOW ARE MINIMUM R VALUES FOR DUCTWORK INSULATION WHERE NOT OTHERWISE SPECIFICALLY SPECIFIED, PER ASHRAE 90.1-2016.
   - 5.1. SUPPLY/RETURN - HEATING & COOLING

CLIMATE ZONE	EXTERIOR, ATTICS, PARKING GARAGE, CRAWL SPACE.	UNCONDITIONED & BURIED DUCTS	INDIRECTLY CONDITIONED, RETURN AIR PLENUM. (C) (NO INSUL. ON RETURN)
0 TO 4	R-8	R-6	R-1.9
5 TO 8	R-12	R-6	R-1.9

   - 5.2. GENERAL NOTES
     - A. INTERIOR RETURN DUCTWORK, IN INDIRECTLY CONDITIONED RETURN AIR PLENUM SPACE - NO INSULATION REQUIRED.
     - B. SUPPLY DUCTWORK TO HAVE A MINIMUM OF 1.5" OF INSTALLED THICKNESS INSULATION REGARDLESS OF LOCATION.
6. ALL DUCTWORK SIZES SHOWN ARE FREE AREA DIMENSIONS. EXHAUST DUCTWORK SHALL BE UNINSULATED.
7. THE INTERIOR OF SUPPLY AND RETURN DUCTWORK VISIBLE BEHIND DEVICES (GRDs), SHALL BE PAINTED FLAT BLACK.
8. LINE DUCTWORK FIFTEEN FEET UPSTREAM AND DOWNSTREAM OF ALL FANS (EXCEPT FOR TYPE I KITCHEN HOOD, TYPE II DISHWASHER EXHAUST OR EVAPORATIVE COOLING) AND WHERE INDICATED WITH 1" THICK, 1.5# DENSITY DUCT LINER. LINING SHALL BE APPLIED TO DUCTWORK WITH FIRE RESISTANT ADHESIVES, (FOSTER 85-10 OR EQUAL) AND COPPER OR CADMIUM PLATED MECHANICAL FASTENERS, (GRAHAM, OMARK OR EQUAL). ALL DUCT SIZES INDICATED ARE CLEAR INSIDE.
9. FLEXIBLE DUCTWORK WHERE INDICATED ON THE DRAWINGS SHALL BE INSULATED, WITH PLASTIC VAPOR BARRIER AT INTERIOR AND EXTERIOR, STEEL WIRE COIL REINFORCED. JOINTS SHALL BE BAND-CLAMPED, MASTIC-DUCT SEALER AND TAPE SEALED TO MAINTAIN INTEGRITY OF VAPOR BARRIER. FLEXIBLE INSTALLATION SHALL BE SUPPORTED TO ELIMINATE SAGS. FLEXIBLE GLASS FIBER INSULATION SHALL HAVE A MAXIMUM 0.23 K VALUE AT 75°F. INSTALLATION SHALL MEET ASHRAE & SMACNA STANDARDS. UNLESS NOTED OTHERWISE MAXIMUM LENGTH IS 5'-0" AND TWO 45° BENDS.
10. FIRE DAMPERS SHALL BE DYNAMIC (RATED FOR SYSTEM VELOCITY) AND MEET UL 555 AND SHALL HAVE BLADES OUT OF AIR STREAM IN COILED POSITION. FUSIBLE LINK SHALL BE RATED AT 165°F.
11. COMBINATION FIRE/SMOKE DAMPERS SHALL BE DYNAMIC (RATED TO SYSTEM VELOCITY) MEET UL 555S.
12. DUCTWORK TO BE CONSTRUCTED TO SMACNA AND ASHRAE DUCT CONSTRUCTION STANDARDS.

DUCTWORK SYSTEMS: (2)	SMACNA CLASS		LEAKAGE CLASS (3)	
	PRESSURE (1)	SEAL	ROUND	RECT.
CONSTANT VOLUME	2	A	2	4
RETURN	2	B	4	8
EXHAUST (NEGATIVE)	2	B	4	8
EXHAUST (POSITIVE)	3	A	2	4

PRESSURE CLASS OPTIONS: 1/2", 1", 2", 3", 4", 6" 10"

NOTE (1): THESE ARE MINIMUMS, REFER TO EQUIPMENT SCHEDULES & SUBMITTAL DOCUMENTS, IF ESP MEETS OR EXCEEDS THESE FIGURES, INCREASE PRESSURE CLASS TO NEAREST CLASS THAT IS 0.5" W.C. OVER THE LISTED ESP. WHERE INFORMATION IS NOT PROVIDED THE CONTRACTOR MUST SUBMIT A RFI.

NOTE (2): WHEN USED AS PART OF A SMOKE CONTROL OR REMOVAL SYSTEM SHALL, AT A MINIMUM, BE SMACNA PRESSURE CLASS 3, SEAL CLASS A

NOTE (3): LEAKAGE CLASS IS CFM LEAKAGE/100 SQ.FT. @ 1" H_2O

NOTE (4): UNLESS NOTED OTHERWISE FUME EXHAUST DUCTS AND SUPPORTS TO BE FABRICATED FROM 316 STAINLESS STEEL, MINIMUM 18-GA. SEAMS AND JOINTS TO BE WELDED LIQUID/AIR TIGHT.

DUCTWORK ELBOWS:

ROUND: FPM	MINIMUM RADIUS/DIA RATIO
TO 1000	0.75
1,001 TO 1,500	1
1,500+	1.5(2)

ASPECT RATIO, W/D

RECTANGULAR: R/D	0.25	0.5	1	2	3	4
0.0 (3)	(1)	(1)	(1)	(1)	(1)	(1)
0.5	(1)	(1)	(1)	(1)	(1)	(1)
1	(1)	(1)	(1)	(1)	(1)	(1)
1.5 (2), (5)	(1)	(1)	(4)	(4)	(4)	(4)
2	(1)	(4)	(4)	(4)	(4)	(4)
3	(1)	(4)	(4)	(4)	(4)	(4)

NOTE (1): MUST HAVE AIRFOIL TURNING VALVES

NOTE (2): STANDARD/DEFAULT CENTERLINE RADIUS

NOTE (3): MITRED ELBOW

NOTE (4): TURNING VANES NOT REQUIRED

NOTE (5): THIS R/D MUST BE USED FOR TYPE I GREASE DUCTS, TURNING VANES NOT ALLOWED

MECHANICAL PRODUCTS

1. DIFFUSERS, REGISTERS AND GRILLES: MAXIMUM SOUND PRESSURE LEVELS SHALL NOT EXCEED NC 30. COORDINATE FINISH AND MOUNTING TYPE WITH ARCHITECT. ACCEPTABLE MANUFACTURERS: TITUS, NAILOR, KRUEGER, TUTTLE AND BAILEY, PRICE
2. CONTROL DAMPERS: LEAKAGE CLASS 1A/1. EQUAL TO RUSKIN CD-60 (CD-50 IN WET LOCATIONS)
3. PIPE HANGERS: PIPE SIZES 1/2" TO 1 1/2": MALLEABLE IRON, CARBON STEEL, ADJUSTABLE SWIVEL, SPLIT RING. PIPE SIZES OVER 2" (UNLESS NOTED OTHERWISE): CARBON STEEL, ADJUSTABLE, CLEVIS. PIPE SIZES CHILLED WATER 8" AND OVER, HEATING WATER 6" AND OVER, STEAM (SUPPLY & CONDENSATE) 4" AND OVER: ADJUSTABLE STEEL YOKE, CAST IRON ROLL, DOUBLE HANGER. SYSTEM LOAD (PIPE FULL OF DESIGN LIQUID OR GAS) ON HANGER MUST NOT EXCEED MORE THAN 85% OF HANGER CAPACITY.
4. PIPING:
   - 4.1. EQUIPMENT DRAIN OVERFLOWS AND CONDENSATE DRAIN PIPING: TYPE "M" COPPER (ASTM B-88), WROUGHT FITTINGS (ASME B16.22), JOINTS: ANSI/ASTM B32, SOLDER: 95/5 TIN/ANTIMONY, 0.2% MAX LEAD.
5. DUCT MOUNTED SMOKE DETECTORS:
   - 5.1. WHEN THE DUCT TYPE SMOKE DETECTOR IS REQUIRED TO BE PART OF THE DESIGN BUILD FIRE ALARM SYSTEM: SHALL BE FURNISHED BY THE FIRE ALARM CONTRACTOR, INSTALLED BY THE MECHANICAL CONTRACTOR AND WIRED BY THE FIRE ALARM CONTRACTOR
   - 5.2. WHEN THE DUCT TYPE DETECTOR IS NOT PART OF THE FIRE ALARM SYSTEM: THE DUCT MOUNTED SMOKE DETECTORS SHALL BE FURNISHED, INSTALLED AND WIRED BY THE MECHANICAL CONTRACTOR. (NORMALLY PROVIDED AT 24 VAC.)
   - 5.3. DUCT MOUNTED SMOKE DETECTORS SHALL BE INSTALLED ON AIR MOVING EQUIPMENT THAT EXCEEDS 2,000 CFM AND ON AIR MOVING EQUIPMENT UNDER 2,000 CFM THAT SUPPLIES A COMMON SPACE AND THE TOTAL CFM CAPACITY OF THE EQUIPMENT SERVING THE SPACE EXCEEDS 2,000 CFM.
   - 5.4. DUCT MOUNTED DETECTORS SHALL BE WIRED TO SHUT DOWN THE ASSOCIATED AIR MOVING EQUIPMENT ON ALARM.
6. DETECTORS TO BE MOUNTED IN THE SUPPLY AIR DUCTWORK.
7. AIR COOLED CONDENSER: PROVIDE COILS WITH INTEGRAL SUBCOOLING. COILS SHALL BE ALUMINUM FINS ON COPPER TUBES (LEAK TESTED 150 PSIG, PRESSURE TESTED 420 PSIG). FANS SHALL BE DIRECT DRIVE PROPELLER WITH FAN GUARD. FAN SHAFT AND BLADES SHALL BE CORROSION PROTECTED. PROVIDE A FILTER/DRYER & SIGHT GLASS. ACCEPTABLE MANUFACTURERS: TRANE, CARRIER, YORK, DAIKIN.
8. SPLIT SYSTEM FAN COIL UNIT: UNITS SHALL HAVE GALVANIZED STEEL CABINET WITH FIBERGLASS INTERNAL LINER AND SERVICE PANELS. FAN SHALL BE CENTRIFUGAL FORWARD CURVE, STATICALLY AND DYNAMICALLY BALANCED, AND HAVE PERMANENTLY LUBRICATED OR BALL BEARING SHAFT BEARINGS. COILS SHALL BE COPPER TUBES MECHANICALLY BONDED TO ALUMINUM FINS AND LEAK TESTED AT 350 PSIG. PROVIDE A 7 DAY PROGRAMMABLE WALL THERMOSTAT, 1" DISPOSABLE MERV 8 FILTERS, MULTI/VARIABLE SPEED MOTOR WITH SPEED SWITCH AND 18 GAUGE STEEL DRAIN PAN UNDER COILS. ACCEPTABLE MANUFACTURERS: TRANE, CARRIER, YORK, DAIKIN.
9. REFRIGERANT PIPING: PROVIDE PIPING BETWEEN AIR-COOLED CONDENSING UNIT AND FAN COIL UNIT OR HEAT PUMP. PROVIDE ALL NECESSARY AUXILIARIES AND APPARATUSES TO MAKE SYSTEM COMPLETE AND OPERABLE UNDER FULLY AUTOMATIC CONTROL. PIPING SHALL BE ACR COPPER TUBING MADE UP WITH WROUGHT COPPER FITTINGS USING SILVER SOLDER OF SIZES AS RECOMMENDED BY MANUFACTURER. SUCTION LINES, HOT GAS BYPASS AND OUTDOOR LIQUID LINES SHALL BE INSULATED WITH 3/4" THICK RIGID CLOSED CELL FOAM INSULATION. PROVIDE A FILTER/DRYER AND SIGHT GLASS IN THE LIQUID LINE. (DO NOT RUN PIPE WITH INSULATION IN A RETURN AIR PLENUM.)

AUTOMATIC TEMPERATURE CONTROLS

1. THE MECHANICAL CONTRACTOR SHALL PROVIDE A COMPLETE SYSTEM OF AUTOMATIC TEMPERATURE CONTROLS. THIS SYSTEM SHALL INCLUDE BUT NOT BE LIMITED TO: HEAT/OFF/COOL/AUTO - THERMOSTAT, AUTO/MANUAL - FAN, TRANSFORMERS AND ALL REQUIRED RELAYS, WIRING AND CONDUIT. THERMOSTAT SHALL BE 7 DAY PROGRAMMABLE WITH AUTOMATIC CHANGE OVER FROM HEATING TO COOLING AND VICE VERSA.
2. THE MECHANICAL CONTRACTOR SHALL PROVIDE AND INSTALL, IN ACCORDANCE WITH THE NEC AND THIS PROJECT ELECTRICAL SPECIFICATIONS, ALL CONDUIT, WIRE, JUNCTION BOXES, THERMOSTAT BACK BOXES AND CIRCUIT BREAKERS REQUIRED FOR A FULLY OPERATIONAL ATC SYSTEM. 120V POWER, IF NOT PROVIDED, SHALL BE OBTAINED FROM LOCATIONS PROVIDED ON THE ELECTRICAL DESIGN DOCUMENTS - IF NO INFORMATION IS PROVIDED THE CONTRACTOR MUST ISSUE AN RFI DURING THE BID PROCESS TO CLARIFY.
3. WHERE AN EXISTING OR NEW BAS SYSTEM IS UTILIZED THE CONTRACTOR SHALL PROVIDE A GUI PAGE FOR EACH SYSTEM. GRAPHICS MUST MATCH OR EXCEED THE EXISTING FOR DETAIL AND INFORMATION PROVIDED.
4. SUBMIT SHOP DRAWINGS OF TEMPERATURE CONTROL WIRING, LOCATION OF DEVICES AND INSTALLATION DATA FOR REVIEW PRIOR TO INSTALLATION.

TEST AND BALANCE (TAB)

1. BALANCE ALL DUCTS, DIFFUSERS, AND GRILLES TO OBTAIN THE AIR QUANTITIES AS SHOWN ON PLANS. TEST AND BALANCE WORK SHALL BE PERFORMED BY AN INDEPENDENT, APPROVED, AND CERTIFIED AABC OR NEBB CONTRACTOR.
2. THE CONTRACTOR IS RESPONSIBLE FOR ADJUSTING DIFFUSER THROWS. LINEAR DIFFUSERS IN A HORIZONTAL CEILING SYSTEM WILL GENERALLY THROW AIR HORIZONTAL - SEE DWGS FOR DIRECTION ARROW. IF NO DIRECTION ARROW IS ILLUSTRATED THE CONTRACTOR MUST DIRECT AN RFI TO THE ENGINEER TO OBTAIN PROPER THROW DIRECTIONS.
3. THE TEST AND AIR BALANCE (TAB) REPORT SHALL INCLUDE DESIGN AIR QUANTITIES AND AIR QUANTITIES AFTER ADJUSTMENTS. FURNISH OWNER'S REPRESENTATIVE WITH A PDF COPY OF THE FINAL TAB REPORT.

NOTES

1. DIELECTRIC FITTINGS SHALL BE USED WHEREVER DISSIMILAR METALS ARE JOINED.
2. PROVIDE ACCESS PANELS IN CEILINGS & WALLS TO ACCESS MECHANICAL/PLUMBING EQUIPMENT AND APPURTENANCES WHERE REQUIRED. DRYWALL CEILINGS: GFRG OR BAUCO•PLUS II. DRYWALL WALLS: BAUCO•PLUS II. RATED DRYWALL WALLS OR CEILINGS: ACUDOR FW-5050-DW. MINIMUM SIZE FOR ACCESS OF EQUIPMENT: 24"x24" OR PER LOCAL CODE, WHICH EVER IS LARGER.
3. WHERE VICTAULIC SYSTEMS ARE APPROVED ON A PER-PROJECT BASIS, "ROUST-A-BOUT" FITTINGS ARE NOT ALLOWED.
4. ALL EQUIPMENT SHALL BE RATED IN EXCESS OF THE AVAILABLE FAULT CURRENT AT THE POINT OF CONNECTION.
5. WHERE VFDs (VSDs) AND MOTORS ARE PROVIDED BY THE MECHANICAL OR PLUMBING CONTRACTOR: VFD DRIVES SHALL MEET THE FOLLOWING MINIMUM STANDARDS - BUILT-IN BACNET MS/TP COMMUNICATIONS. PROVIDE WITH AN INTEGRAL FUSED DISCONNECT OR 100% RATED AIC CIRCUIT BREAKER. ALLOW FOR A/C POWER FLUCTUATIONS OF - SURGE TO 525V FROM 480V, SAG TO 375V FROM 480V, FREQUENCY DEVIATION FROM 50 TO 65Hz, VOLTAGE SPIKES UP TO 2X NORMAL INCOMING VOLTAGE FOR 1 MILLISECOND, ACCEPT A 2% VOLTAGE IMBALANCE. VFDs TO BE DANFOSS VLT HVAC DRIVE FC102, ABB ACH550, YASKAWA Z1000, MITSUBISHI FR-F800. EXTERIOR DRIVES RATED TO 50°C WITHOUT DE-RATING. INTERIOR DRIVES RATED TO 40°C WITHOUT DE-RATING. DRIVES MUST HAVE A dv/dt OUTPUT FILTER. BI-DIRECTIONAL COASTING MOTOR RESTART CAPABILITY. BROKEN BELT/LOAD ABNORMALITY DETECTION. ENCLOSURES TO BE RATED FOR THE INSTALLED LOCATION.
6. ELECTRIC MOTORS - MOTORS ON VFD SERVICE, TO HAVE A SHAFT GROUNDING DEVICE, OVER 100 HP TO HAVE A SHAFT GROUNDING DEVICE AND AN INSULATED BEARING ON THE NON-DRIVEN END OF THE MOTOR. (OPPOSITE END OF THE MOTOR RELATIVE TO WHERE THE SHAFT GROUNDING DEVICE IS LOCATED.) MOTORS TO COMPLY WITH NEMA MG-1. MOTORS TO BE RATED FOR THE INSTALLED LOCATION.
7. PUMPS: EFFECTIVE 1 JANUARY 2020, EQUIPMENT REGULATED BY THE DEPARTMENT OF ENERGY PUMP STANDARDS SHALL BE TESTED USING THE PER_{CL} METHOD. PUMPS BEARING ONLY THE PEI_{VL} INDEX ARE NOT APPROVED. SUBMITTALS MUST NOTE THE PUMP EFFICIENCY INDEX AND THE DOE MINIMUM STANDARD.

PART THREE - EXECUTION

1. THE CONTRACTOR SHALL PROVIDE ALL SLEEVES, OPENINGS, CUTTING AND PATCHING NECESSARY FOR THE INSTALLATION OF THE WORK. CUTTING AND PATCHING SHALL BE DONE BY WORKMEN SKILLED IN THE TRADES REQUIRED AND PAID BY THE CONTRACTOR REQUIRING THE WORK COMPLETED. SYSTEMS PASSING THROUGH WATER PROOFING OR DAMP PROOFING SHALL BE WATER TIGHT. SYSTEMS PASSING THROUGH FIRE RATED CONSTRUCTION SHALL BE FIRE PROOFED WITHER MATERIAL APPROVED FOR THE FIRE AND TEMPERATURE RATING OF THE ASSEMBLY AND U.L. LISTED. (IF THE ARCHITECT HAS NOT PROVIDED A STANDARD DRAWING/ASSEMBLY FOR AN APPLICATION AND ONE IS NOT AVALIABLE, THE CONTRACTOR IS RESPONSIBLE TO OBTAIN AN "ENGINEERING JUDGEMENT" AND ASSOCIATED DRAWING FOR THE APPLICATION.)
2. EQUIPMENT LOCATED ON A ROOF WHERE NO PARAPET OR GUARD RAIL, 42" HIGH OR GREATER, EXISTS, MUST BE INSTALLED A MINIMUM OF 10 FEET FROM THE ROOF EDGE. IF NOT POSSIBLE A STATIC LINE ANCHOR POINT PER ANSI/ASSE STANDARDS IS TO BE PROVIDED
3. THE CONTRACTOR SHALL PROVIDE ALL RIGGING, HANDLING OF MATERIALS AND EQUIPMENT, AND THE NECESSARY PROTECTION FOR MATERIALS AND EQUIPMENT.
4. THE CONTRACTOR WILL PROTECT THE WORK AND MATERIAL AGAINST DIRT, THEFT, INJURY OR DAMAGE UNTIL ACCEPTED BY OWNER. ALL WORK SHALL BE TURNED OVER TO OWNER CLEAN AND IN NEW CONDITION.
5. WHERE PIPES ARE INSTALLED THAT PASS THROUGH FLOORS THAT ARE NOT SLAB-ON-GRADE AND THE FLOOR IS A FIRE RATED ASSEMBLY, PER CODE, THE OPENING CREATED TO ACCEPT THE PIPING ASSEMBLY THROUGH THE FLOOR MUST USE A LISTED SYSTEM TO BE TEMPERATURE AND FIRE RATED TO MATCH THE RATING OF THE FLOOR (MIN 2 HOUR).
6. EQUIPMENT CONDENSATE DRAINS: FAN COIL, AHU AND OTHER SIMILAR EQUIPMENT CONDENSATE DRAINS MAY OR MAY NOT BE DOCUMENTED ON THE PROJECT DRAWINGS. IT IS THE RESPONSIBILITY OF THE CONTRACTOR TO PROVIDE CONDENSATE DRAINS TO AN APPROVED RECEPTOR, SIZE DRAIN TO MATCH OR EXCEED CODE MINIMUMS. PROVIDE A CONDENSATE PUMP WHERE REQUIRED (IE: LITTLE GIANT NXTGEN)
7. EACH CONTRACTOR SHALL PROVIDE ALL FOUNDATIONS, HANGERS, AND SUPPORTS FOR ALL EQUIPMENT SUPPLIED AND/OR INSTALLED UNDER THEIR WORK. ANY EQUIPMENT WITH MOVING PARTS SHALL BE PROVIDED WITH VIBRATION ISOLATION AND FLEXIBLE CONNECTIONS TO PIPING AND OR DUCTWORK IF APPLICABLE. MISCELLANEOUS STEEL AND ANCHORS REQUIRED FOR THE INSTALLATION OF THE CONTRACTORS EQUIPMENT IS THE RESPONSIBILITY OF THE CONTRACTOR AND THE RETENTION OF A STRUCTURAL ENGINEER OR OTHER DESIGN DISCIPLINE TO COMPLETE THE WORK IS THE RESPONSIBILITY OF THE CONTRACTOR. EG: THE USE OF CONCRETE ANCHORS WILL REQUIRE DOCUMENTATION APPROVAL FROM A STRUCTURAL ENGINEER RETAINED BY THE CONTRACTOR.
8. WHERE PIPES OR CONDUITS PASS THROUGH WALLS, FLOORS, OR CEILINGS IN FINISHED AREAS, THEY SHALL BE FURNISHED WITH ESCUTCHEON PLATES (COLOR PER ARCHITECT AND/OR INTERIOR DESIGNER).
9. PIPES AND/OR CONDUITS PASSING THROUGH WALL, FLOORS AND PARTITIONS SHALL BE PROVIDED WITH SLEEVES. SLEEVES PASSING THROUGH WATER PROOFING OR DAMP PROOFING SHALL BE WATER TIGHT. SLEEVES/PIPES PASSING THROUGH FIRE RATED CONSTRUCTION SHALL BE FIRE PROOFED WITH MATERIAL APPROVED FOR THE FIRE AND TEMPERATURE RATING OF THE ASSEMBLY AND U.L. LISTED. (IF THE ARCHITECT HAS NOT PROVIDED A STANDARD DRAWING/ASSEMBLY FOR AN APPLICATION AND ONE IS NOT AVAILABLE, THE CONTRACTOR IS RESPONSIBLE TO OBTAIN AN "ENGINEERING JUDGEMENT" AND ASSOCIATED DRAWING FOR THE APPLICATION.)
10. AT THE CONCLUSION OF THE JOB, EACH PIECE OF EQUIPMENT, VALVE, SWITCH, STARTER, PANEL, PIPE LINE, CONDUIT, DUCT, ETC., SHALL BE CLEARLY IDENTIFIED WHETHER EXPOSED OR CONCEALED, COVERED OR UNCOVERED, IN ACCORDANCE WITH OSHA AND ANSI REGULATIONS. IDENTIFY PIPES NEAR EACH VALVE WITH "BRANDY-PERMA' CODE PIPE TAPE" OR T. & B. WESTLINE "TEL-A-PIPE" INDICATING DIRECTION OF FLOW, SERVICE, ZONE, AND SIZE. TAPE SHALL BE APPLIED TO PIPE, CONDUIT, OR COVERING. VALVES, CONTROLS, AND DAMPERS SHALL BE IDENTIFIED BY 2-INCH LACQUERED BRASS TAGS WITH STAMPED LETTERS FASTENED WITH "S" HOOKS OR CHAINS. EQUIPMENT IS TO BE IDENTIFIED AS TO FUNCTION AND PURPOSE BY MEANS OF PERMANENTLY ATTACHED LAMINATED ENGRAVED PHENOLIC NAMEPLATES WITH BEVELED EDGES, AND WHITE LETTERS ON BLACK BACKGROUND. (NO ADHESIVE LABELS ALLOWED).
11. AT THE CONCLUSION OF THE WORK, ALL EQUIPMENT AND SYSTEMS SHALL BE BALANCED, ADJUSTED, AND TESTED TO PROVIDE A QUIET-OPERATING, STABLE, AND SAFELY OPERATING SYSTEM(S). DEMONSTRATE OPERATION OF ALL SYSTEMS TO THE OWNER'S DESIGNATED REPRESENTATIVE. THE TEST AND BALANCE WORK SHALL BE PERFORMED IN ACCORDANCE WITH NEBB OR AABC STANDARDS, BY INDEPENDENT, APPROVED, AND CERTIFIED TEST AND BALANCE PERSONNEL. THE TEST AND BALANCE SUBCONTRACTOR IS TO PROVIDE INSTRUMENT TEST PORT COVERS AT ALL TEST LOCATIONS ON OUTDOOR AIR HANDLING UNITS AND AT ALL OTHER OUTDOOR AIR HANDLING EQUIPMENT. TEST PORT COVERS SHALL BE VENTLOK MODEL #699, OR APPROVED EQUAL.
12. IN LOCATIONS WHERE SEISMIC DESIGN REQUIREMENTS EXIST, THE MECHANICAL/PLUMBING CONTRACTOR IS RESPONSIBLE FOR RETAINING AND PAYING FOR THE DESIGN SERVICES OF A STRUCTURAL ENGINEER TO CREATE THE DESIGN AND INSTALLATION DRAWINGS FOR MECHANICAL/PLUMBING SYSTEMS SEISMIC RESTRAINT SUPPORT, PER THE PROJECT BUILDING CODE. PRIOR TO CONSTRUCTION, THE CONTRACTOR SHALL SUBMIT MECHANICAL SYSTEMS SHOP DRAWINGS BASED UPON MULTI DISCIPLINE COORDINATION. INCLUDED WITH THE SHOP DRAWING SUBMISSION SHALL BE SEISMIC RESTRAINT DRAWINGS NOTING WHERE SEISMIC SUPPORT IS REQUIRED. FOR EACH AREA NOTED NEEDING SEISMIC SUPPORT FOR THE MECHANICAL SYSTEMS, THERE SHALL BE A SEISMIC DRAWING DETAILING THE REQUIRED SUPPORT. THE SEISMIC SUPPORT DRAWINGS SHALL BE SIGNED AND SEALED BY A REGISTERED STRUCTURAL ENGINEER IN THE SAME STATE AS THE PROJECT. IN ADDITION TO THE PROJECT DESIGN TEAM REVIEW, THE SEISMIC SUPPORT DRAWINGS WILL BE ISSUED TO THE LOCAL BUILDING DEPARTMENT FOR REVIEW AS PART OF A DEFERRED SUBMITTAL FOR THE BUILDING DOCUMENTS. COMMENCEMENT OF CONSTRUCTION PRIOR TO BUILDING DEPARTMENT REVIEW IS AT THE CONTRACTOR'S RISK.
13. CONTRACTOR SHALL REFER TO THE ARCHITECTURAL REFLECTED CEILING PLAN FOR EXACT LOCATION OF GRILLES, REGISTERS AND DIFFUSERS.
14. PIPE HANGERS: PIPE SIZES 1/2" TO 1 1/2" - 5'-0" MAX SPACING, 3/8" MIN. ROD DIAMETER; PIPE SIZES 2" TO 3" - 8'-0" MAX SPACING, 1/2" MIN. ROD DIAMETER; PIPE SIZES 4 TO 6"-10'-0" MAX SPACING, 5/8" MIN. ROD DIAMETER.
15. WATER PROOFING AND FLASHING OF PIPE PENETRATIONS THROUGH THE EXTERIOR WALL AND ROOF SHALL BE THE RESPONSIBILITY OF THE INSTALLING MECHANICAL/PLUMBING CONTRACTOR. THE CONTRACTOR SHALL COORDINATE LOCATIONS, MEANS AND METHODS WITH GENERAL CONTRACTOR/OWNER FOR THE VARIOUS BUILDING SYSTEMS. ROOFING MEMBRANE PENETRATIONS MUST BE PERFORMED BY A CONTRACTOR THAT IS WARRANTY APPROVED FOR THE SPECIFIC ROOFING SYSTEM.
16. CONTRACTOR SHALL OBTAIN FROM THE ARCHITECT THE EXACT LOCATION OF EQUIPMENT AND ANY OTHER APPARATUS SPECIFIED IN THESE DRAWINGS.
17. INSTALL CONDENSATE PIPING, WITH P-TRAP, FULL SIZE FROM EQUIPMENT TO FLOOR SINK, MOP SINK OR TAILPIECE (3/4" MAXIMUM CONDENSATE DRAIN LINE SIZE FOR TAILPIECE).

DUSTIN T. HART
Exp: 6/30/2023
MECHANICAL
No. 24362

MAY 24 2021

msa.
ENGINEERING CONSULTANTS
370 E Windmill Lane, Suite 100
Las Vegas, NV 89123
702.896.1100
msa-ec.com

MSA #L20211

IZ design studio
design . . . sustainability . . . architecture.

tel. 702.441.0026
fax. 702.475.4755
www.izdesignstudio.com

7229 W. Sahara Ave Suite 120
Las Vegas, NV 89117
Nevada

Sheet Name
SPECIFICATIONS

Project Name
Southern Nevada Health District
SNHD LAB EXPANSION
700 South Martin Luther King Blvd.
Las Vegas, Nevada 89106

DELTA NO.	REVISION NO.	DESCRIPTION	DATE

Project Number	20427
Date	05/24/2021
Drawn By	MSA
Checked By	PE

M001

ENERGY RECOVERY UNIT SCHEDULE

MARK	MANUFACTURER MODEL	SERVICE	BUILDING EXHAUST AIR CFM	MINIMUM OUTSIDE AIR CFM	AIR PRESSURE DROP (IN W.C.) MIN OA	SUMMER HEAT EXCHANGER PERFORMANCE								WINTER HEAT EXCHANGER PERFORMANCE								FILTERS	
						OUTSIDE AIR TEMPERATURE (°F)		BUILDING EXHAUST AIR TEMPERATURE (°F)		SUPPLY AIR TEMPERATURE (°F)		TOTAL COOLING (MBH)	SENSIBLE COOLING (MBH)	OUTSIDE AIR TEMPERATURE (°F)		BUILDING EXHAUST AIR TEMPERATURE (°F)		SUPPLY AIR TEMPERATURE (°F)	POST HEAT EXCHANGER EXHAUST AIR TEMPERATURE (°F)		TOTAL HEATING (MBH)	SA FILTER TYPE	SA FILTER FACE AREA (SQ IN)
						DB	WB	DB	WB	DB	WB			DB	WB	DB	WB	DB	DB	WB			
ERV 1	RENEWAIRE HE1.5JINV-S15EE--TGNTF--L	VRF SYSTEM	1050	1050	-	115	71	75	62.2	86.7	63.3	34.6	32.1	27	25	70	53.9	57.4	-	-	44.5	MERV 8	600

ENERGY RECOVERY UNIT SCHEDULE (CONTINUED)

MARK	FILTERS (CONT)		SUPPLY FAN							EXHAUST FAN							ELECTRICAL			OPERATING WEIGHT (LBS)	REMARKS
	EA FILTER TYPE	EA FILTER FACE AREA (SQ IN)	AIR FLOW (CFM)	ESP (IN WG)	FAN TYPE	FAN DIAMETER/ QUANTITY (IN)	WATTS	HP	RPM	AIRFLOW (CFM)	ESP (IN WG)	TYPE	FAN DIAMETER/ QUANTITY (IN)	WATTS	HP	RPM	V/PH/HZ	MCA	MOCP		
ERV 1	MERV 8	600	1050	0.75	IMPELLER	-	408	1	-	1050	0.75	IMPELLER	-	390	1	-	208/1/60	9.9	15	550	1, 2, 3, 4, 5, 6, 7, 8, 9, 10, 11

1. CORE TYPE: G5
2. INSTALL INDOORS.
3. AIRFLOW: V ORIENTATION.
4. STANDARD SINGLE WALL CONSTRUCTION.
5. FRESH AIR MOTOR: DIRECT DRIVE ECM.
6. EXHAUST AIR MOTOR: DIRECT DRIVE ECM.
7. FLOW CONTROL: OA- MOTORIZED DAMPER, EA-BACKDRAFT DAMPER.
8. UNIT CONTROL: TERMINAL STRIP FOR EC MOTORS.
9. DISCONNECT: STANDARD NON-FUSED, UNIT MOUNTED.
10. TRANSFORMER WITH ISOLATION RELAY.
11. FILTER MONITOR BOTH AIRSTREAMS.

VENTILATION CALCULATIONS

Minimum Ventilation Rate in Breathing Zone (VFC-1)

UMC 2018, TABLE 402.1
[ASHRAE Std 62.1]

Uncorrected Outdoor Air Intake (Vou) =	59	CFM
Minimum System Ventilation Efficiency (Ev) =	0.931	
Required Outdoor Air Intake (Vot) =	63	CFM

Rp = Outdoor air flow rate required per person - Table 402.1, 2018 UMC
Ra = Outdoor air flow rate required per square foot - Table 402.1, 2018 UMC
Az = Zone floor area (net occupiable) ft²
Pz = Zone population - average per 403.4 or default to Table 402.1, 2018 UMC
Ez = Air Distribution Factor - Table 403.2.2, 2018 UMC
Voz = Vbz / Ez - Equation 403.2.3, 2018 UMC
Vbz = CFM - breathing zone outdoor air
Vpz = CFM - individual supply air
Evz = Individual space ventilation efficiency

ROOM NUMBER	SPACE DESCRIPTION	Rp	Ra	PEOPLE /1000 ft²	CODE MATCH	Az	Pz CALC.	Pz KNOWN	Ez	Voz CFM	Vbz CFM	Vpz CFM	Evz
-	Corridors	-	0.06	-	YES	370	0		0.8	28	23	250	0.931
128	Warehouses	10	0.06	-	YES	598	0		0.8	45	36	975	0.997
147	Restroom	-	-	-	NO	73	0		0.8	0	0	75	1.043
148	Restroom	-	-	-	NO	59	0		0.8	0	0	75	1.043
										Totals:	59	1375	0.931

Minimum Ventilation Rate in Breathing Zone (VFC-2)

UMC 2018, TABLE 402.1
[ASHRAE Std 62.1]

Uncorrected Outdoor Air Intake (Vou) =	28	CFM
Minimum System Ventilation Efficiency (Ev) =	0.987	
Required Outdoor Air Intake (Vot) =	28	CFM

Rp = Outdoor air flow rate required per person - Table 402.1, 2018 UMC
Ra = Outdoor air flow rate required per square foot - Table 402.1, 2018 UMC
Az = Zone floor area (net occupiable) ft²
Pz = Zone population - average per 403.4 or default to Table 402.1, 2018 UMC
Ez = Air Distribution Factor - Table 403.2.2, 2018 UMC
Voz = Vbz / Ez - Equation 403.2.3, 2018 UMC
Vbz = CFM - breathing zone outdoor air
Vpz = CFM - individual supply air
Evz = Individual space ventilation efficiency

ROOM NUMBER	SPACE DESCRIPTION	Rp	Ra	PEOPLE /1000 ft²	CODE MATCH	Az	Pz CALC.	Pz KNOWN	Ez	Voz CFM	Vbz CFM	Vpz CFM	Evz
145	Office space	5	0.06	5	YES	141	1		0.8	17	14	225	0.987
146	Office space	5	0.06	5	YES	136	1		0.8	16	14	225	0.991
										Totals:	28	450	0.987

Minimum Ventilation Rate in Breathing Zone (VFC-3)

UMC 2018, TABLE 402.1
[ASHRAE Std 62.1]

Uncorrected Outdoor Air Intake (Vou) =	138	CFM
Minimum System Ventilation Efficiency (Ev) =	0.946	
Required Outdoor Air Intake (Vot) =	146	CFM

Rp = Outdoor air flow rate required per person - Table 402.1, 2018 UMC
Ra = Outdoor air flow rate required per square foot - Table 402.1, 2018 UMC
Az = Zone floor area (net occupiable) ft²
Pz = Zone population - average per 403.4 or default to Table 402.1, 2018 UMC
Ez = Air Distribution Factor - Table 403.2.2, 2018 UMC
Voz = Vbz / Ez - Equation 403.2.3, 2018 UMC
Vbz = CFM - breathing zone outdoor air
Vpz = CFM - individual supply air
Evz = Individual space ventilation efficiency

ROOM NUMBER	SPACE DESCRIPTION	Rp	Ra	PEOPLE /1000 ft²	CODE MATCH	Az	Pz CALC.	Pz KNOWN	Ez	Voz CFM	Vbz CFM	Vpz CFM	Evz
149	Breakrooms	5	0.12	50	YES	315		20	0.8	172	138	635	0.946
										Totals:	138	635	0.946

Minimum Ventilation Rate in Breathing Zone (VFC-4)

UMC 2018, TABLE 402.1
[ASHRAE Std 62.1]

Uncorrected Outdoor Air Intake (Vou) =	554	CFM
Minimum System Ventilation Efficiency (Ev) =	0.770	
Required Outdoor Air Intake (Vot) =	719	CFM

Rp = Outdoor air flow rate required per person - Table 402.1, 2018 UMC
Ra = Outdoor air flow rate required per square foot - Table 402.1, 2018 UMC
Az = Zone floor area (net occupiable) ft²
Pz = Zone population - average per 403.4 or default to Table 402.1, 2018 UMC
Ez = Air Distribution Factor - Table 403.2.2, 2018 UMC
Voz = Vbz / Ez - Equation 403.2.3, 2018 UMC
Vbz = CFM - breathing zone outdoor air
Vpz = CFM - individual supply air
Evz = Individual space ventilation efficiency

ROOM NUMBER	SPACE DESCRIPTION	Rp	Ra	PEOPLE /1000 ft²	CODE MATCH	Az	Pz CALC.	Pz KNOWN	Ez	Voz CFM	Vbz CFM	Vpz CFM	Evz
143	University/college laboratories	10	0.18	25	YES	1300		32	0.8	693	554	2540	0.770
										Totals:	554	2540	0.770

Minimum Ventilation Rate in Breathing Zone (VFC-5)

UMC 2018, TABLE 402.1
[ASHRAE Std 62.1]

Uncorrected Outdoor Air Intake (Vou) =	47	CFM
Minimum System Ventilation Efficiency (Ev) =	0.869	
Required Outdoor Air Intake (Vot) =	54	CFM

Rp = Outdoor air flow rate required per person - Table 402.1, 2018 UMC
Ra = Outdoor air flow rate required per square foot - Table 402.1, 2018 UMC
Az = Zone floor area (net occupiable) ft²
Pz = Zone population - average per 403.4 or default to Table 402.1, 2018 UMC
Ez = Air Distribution Factor - Table 403.2.2, 2018 UMC
Voz = Vbz / Ez - Equation 403.2.3, 2018 UMC
Vbz = CFM - breathing zone outdoor air
Vpz = CFM - individual supply air
Evz = Individual space ventilation efficiency

ROOM NUMBER	SPACE DESCRIPTION	Rp	Ra	PEOPLE /1000 ft²	CODE MATCH	Az	Pz CALC.	Pz KNOWN	Ez	Voz CFM	Vbz CFM	Vpz CFM	Evz
144	University/college laboratories	10	0.18	25	YES	89	3		0.8	58	47	300	0.869
										Totals:	47	300	0.869

Minimum Ventilation Rate in Breathing Zone (VFC-6)

UMC 2018, TABLE 402.1
[ASHRAE Std 62.1]

Uncorrected Outdoor Air Intake (Vou) =	25	CFM
Minimum System Ventilation Efficiency (Ev) =	1.122	
Required Outdoor Air Intake (Vot) =	22	CFM

Rp = Outdoor air flow rate required per person - Table 402.1, 2018 UMC
Ra = Outdoor air flow rate required per square foot - Table 402.1, 2018 UMC
Az = Zone floor area (net occupiable) ft²
Pz = Zone population - average per 403.4 or default to Table 402.1, 2018 UMC
Ez = Air Distribution Factor - Table 403.2.2, 2018 UMC
Voz = Vbz / Ez - Equation 403.2.3, 2018 UMC
Vbz = CFM - breathing zone outdoor air
Vpz = CFM - individual supply air
Evz = Individual space ventilation efficiency

ROOM NUMBER	SPACE DESCRIPTION	Rp	Ra	PEOPLE /1000 ft²	CODE MATCH	Az	Pz CALC.	Pz KNOWN	Ez	Voz CFM	Vbz CFM	Vpz CFM	Evz
142	Office space	5	0.06	5	YES	239	2		0.8	30	25	315	1.122
										Totals:	25	315	1.122

AIR COOLED VRF CONDENSER UNIT SCHEDULE

MARK	MANUFACTURER MODEL	CHANGEOVER BOX	LOCATION	NOMINAL CAPACITY (TONS)	MODULES			COMPRESSORS		CONDENSER FANS		OA AMBIENT °F		ELECTRICAL			OPERATING WEIGHT (LBS)	EER	COP	REMARKS
					QTY	MARK	MODEL	QTY	TYPE	QTY	TYPE	MIN	MAX	V/PH/HZ	MCA	MOCP				
VCU 1	DAIKIN REYQ264XATJA	BCC 1	WEST LOW ROOF	22	2	VCU 1A	REYQ144XATJA	2	INVERTER	2	DIRECT DRIVEN PROPELLER	27	115	208/3/60	58.3	70	850	11.2	3.62	1, 2, 3, 4, 5, 6, 7, 8, 9 10, 11, 12
						VCU 1B	REYQ120XATJA	2		2				208/3/60	43	50	850			

1. PROVIDE REFRIGERANT LINES SIZED PER MANUFACTURER'S RECOMMENDATIONS.
2. PROVIDE CLEARANCE AROUND UNIT PER MANUFACTURER'S RECOMMENDATIONS.
3. PROVIDE P-TRAPS AND ARRANGE SLOPE OF REFRIGERANT PIPING FOR OIL RETURN.
4. PROVIDE SAFETY CONTROLS.
5. PROVIDE LOW AMBIENT KIT.
6. WITH HEAT RECOVERY.
7. CONTRACTOR SHALL BE CERTIFIED BY EQUIPMENT MANUFACTURER FOR INSTALLATION OF THESE SYSTEMS.
8. CONDENSING UNITS MUST HAVE FULLY MODULATING INVERTER COMPRESSORS.
9. DEMAND LIMITING RELAY CONTACT MUST BE PROVIDED.
10. MANUFACTURERS SUBMITTAL MUST INCLUDE REFRIGERANT PIPING DIAGRAM WITH PIPE DIAMETERS, LENGTHS, AND REFRIGERANT VOLUME.
11. INSTALLING CONTRACTOR MUST HAVE SUCCESSFULLY COMPLETED MANUFACTURERS CERTIFIED INSTALLATION CLASS WITHIN PAST 36 MONTHS.
12. MANUFACTURER MUST PROVIDE 10 YEARS PARTS WARRANTY ON ALL FCUS, CONDENSING UNITS, AND MODE CHANGEOVER DEVICES. WARRANTY CONDITIONS MUST BE CLARIFIED DURING SUBMITTAL PHASE.

VARIABLE REFRIGERANT FLOW INDOOR FAN COIL UNIT SCHEDULE

MARK	GENERAL DATA			MARK	GENERAL DATA		COOLING CAPACITY				HEATING CAPACITY			ELECTRICAL			OPERATING WEIGHT (LBS)	REMARKS
FAN COIL	MNUFACTURER MODEL	CFM	OUTSIDE AIR	OUTDOOR UNIT	LOCATION	TYPE	TOTAL BTUH	EAT (DB)	EAT (WB)	LAT (DB)	TOTAL BTUH	EAT (DB)	LAT (DB)	V/PH/HZ	MCA	MOCP		
VFC 1	DAIKIN FXMQ48PBVJU	1375	70	VCU 1	WAREHOUSE 128	DUCTED	39581	80	62	54.7	55993	68	105.1	208/1/60	3.4	15	115	1, 2, 4, 5, 6
VFC 2	DAIKIN FXMQ12PBVJU	450	30	VCU 1	WAREHOUSE 128	DUCTED	9907	80	62	59.9	13990	68	96.4	208/1/60	1.4	15	70	1, 2, 4, 5, 6
VFC 3	DAIKIN FXMQ18PBVJU	635	150	VCU 1	WAREHOUSE 128	DUCTED	14831	80	62	58.7	20746	68	97.8	208/1/60	1.6	15	95	1, 2, 4, 5, 6
VFC 4	DAIKIN FXMQ96MVJU	2540	720	VCU 1	LAB 143	DUCTED	76887	80	62	52.4	112000	68	108.2	208/1/60	10.1	15	320	1, 2, 3, 4, 5, 6
VFC 5	DAIKIN FXZQ07TAVJU	300	55	VCU 1	HOT LAB 144	CASSETTE	6369	80	62	61.1	8872	68	94.4	208/1/60	0.3	15	40	1, 2, 4, 6
VFC 6	DAIKIN FXZQ09TAVJU	315	25	VCU 1	OFFICE 142	CASSETTE	7103	80	62	59.6	10919	68	99.4	208/1/60	0.3	15	40	1, 2, 4, 6

1. PROVIDE LINE VOLTAGE OR WIRELESS PROGRAMMABLE THERMOSTAT WITH LOCAL OVERRIDE AS SELECTED BY THE OWNER. COORDINATE MOUNTING LOCATION WITH THE ARCHITECT.
2. PROVIDE INTEGRAL CONDENSATE PUMP LOCATED INSIDE OF THE UNIT CASING AND INSULATION.
3. PROVIDE SMOKE DETECTOR IN SUPPLY AIR DUCT.
4. PROVIDE VIBRATION ISOLATION.
5. PROVIDE FLEX DUCT CONNECTION.
6. PROVIDE 1" FILTER AND FILTER RACKS.

VARIABLE REFRIGERANT FLOW INDOOR DISTRIBUTION CONTROLLER SCHEDULE

MARK	MANUFACTURER MODEL	LOCATION	OUTDOOR UNIT	NO. OF PORT ZONES	ELECTRICAL			OPERATING WEIGHT (LBS)	REMARKS
					V/PH/HZ	MCA	MOCP		
BCC 1	DAIKIN BS8Q54TVJ	BREAKROOM 149	VCU 1	8	208/1/60	0.8	15	80	1, 2, 3, 4

1. PROVIDE SHUT OFF VALVE ON EACH REFRIGERANT LINE CONNECTION TO DISTRIBUTION CONTROLLER.
2. PROVIDE CLEARANCE AROUND UNIT PER MANUFACTURER'S RECOMMENDATIONS.
3. PROVIDE P-TRAPS AND ARRANGE SLOPE OF REFRIGERANT PIPING FOR OIL RETURN.
4. INSTALL PER MANUFACTURER'S RECOMMENDATIONS.

AIR DISTRIBUTION SCHEDULE

MARK	MANUFACTURER MODEL	AIRFLOW RANGE	SERVICE TYPE	MAX NC	NECK SIZE	PANEL SIZE	REMARKS
D-1 CFM	TITUS MCD	0-100	CEILING SUPPLY	30	6"Ø	12"X12"	1, 2
D-2 CFM	TITUS MCD	100-205	CEILING SUPPLY	30	8"Ø	24"X24"	1, 2
D-3 CFM	TITUS MCD	205-365	CEILING SUPPLY	30	10"Ø	24"X24"	1, 2
D-4 CFM	TITUS MCD	365-600	CEILING SUPPLY	30	12"Ø	24"X24"	1, 2
D-5 CFM	TITUS R-OMNI	100-280	ROUND SUPPLY	30	8"Ø	16"Ø	1, 2
D-6 CFM	TITUS R-OMNI	400-650	ROUND SUPPLY	30	12"Ø	24"Ø	1, 2
R-1 CFM	TITUS 50F	0-2000	CEILING RETURN	30	22"X22"	24"X24"	1, 2
EX-1 CFM	TITUS 50F	0-180	CEILING EXHAUST	30	10"X10"	12"X12"	1, 2, 3
EX-2 CFM	TITUS 50F	181-600	CEILING EXHAUST	30	14"X14"	24"X24"	1, 2

1. COORDINATE BORDER, COLOR, FINISH AND EXACT LOCATION WITH ARCHITECT
2. PROVIDE DUCT TRANSITION AS REQUIRED.
3. PROVIDE RVD AS PER DIAGRAM.

PROFESSIONAL ENGINEER - STATE OF NEVADA
DUSTIN T. HART
Exp. 6/30/2023
MECHANICAL
NO. 24361
MAY 24 2021

msa
ENGINEERING CONSULTANTS
370 E Windmill Lane, Suite 100
Las Vegas, NV 89123
702.896.1100
msa-ec.com
MSA #L20211

IZ design studio
design...sustainability...architecture.
7229 W. Sahara Ave Suite 100
Las Vegas, NV 89117
tel. 702.441.0026
Fax. 702.475.4755
www.izdesignstudio.com

SCHEDULES
Southern Nevada Health District
SNHD LAB EXPANSION
700 South Martin Luther King Blvd.
Las Vegas, Nevada 89106

DELTA NO.	REVISION NO.	DESCRIPTION	DATE

Sheet Name
Project Name

Project Number	20427
Date	05/24/2021
Drawn By	MSA
Checked By	PE

M002

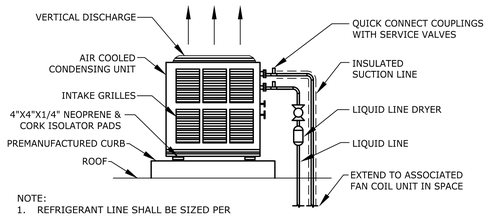

NOTE:
1. REFRIGERANT LINE SHALL BE SIZED PER MANUFACTURER RECOMMENDATIONS.

A / M003 ROOF MOUNTED CONDENSING UNIT
NTS

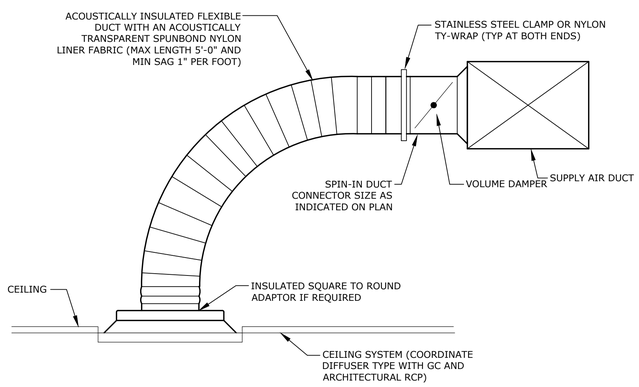

NOTES:
1. USE WORM DRIVE CLAMPS OR DRAW BANDS FOR CONNECTING FLEXIBLE AIR DUCT TO DIFFUSER AND BRANCH DUCT. SPLICES IN FLEXIBLE AIR DUCT SHALL NOT BE ALLOWED.

D / M003 CEILING DIFFUSER WITH FLEX DUCT
NTS

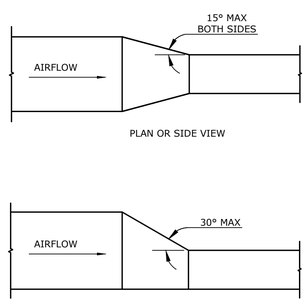

E / M003 DUCT TRANSITION
NTS

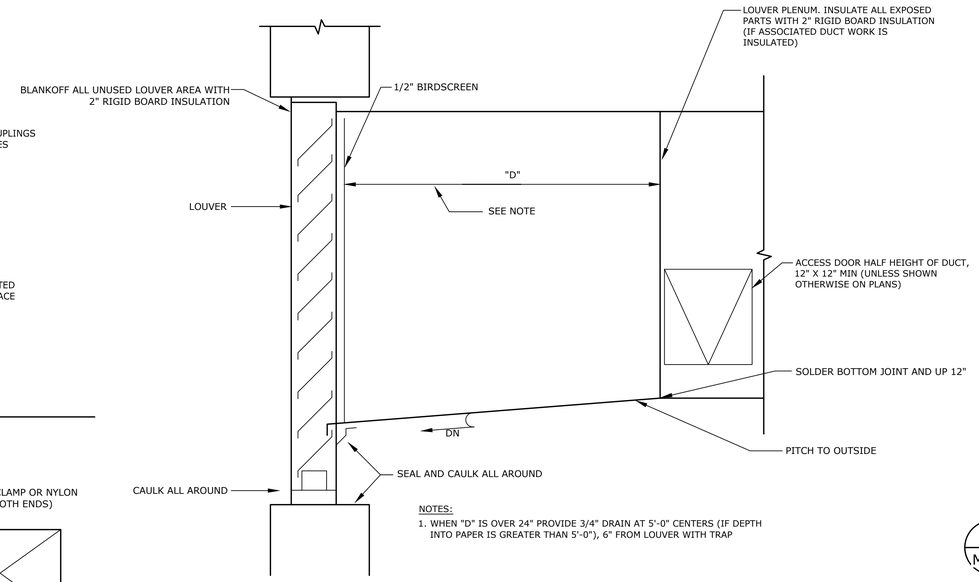

NOTES:
1. WHEN "D" IS OVER 24" PROVIDE 3/4" DRAIN AT 5'-0" CENTERS (IF DEPTH INTO PAPER IS GREATER THAN 5'-0"), 6" FROM LOUVER WITH TRAP

B / M003 LOUVER CONNECTION
NTS

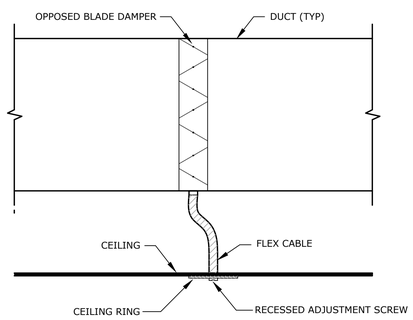

NOTE:
1. INSTALL PER MANUFACTURER RECOMMENDATIONS

F / M003 REMOTE VOLUME DAMPER (RVD)
NTS

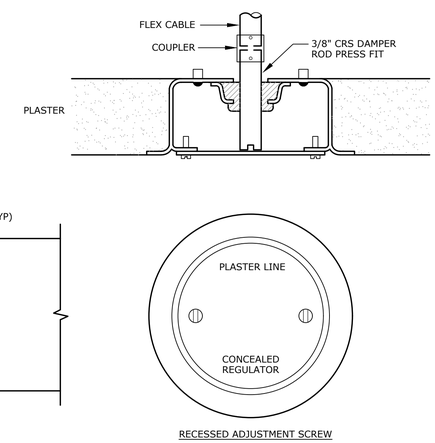

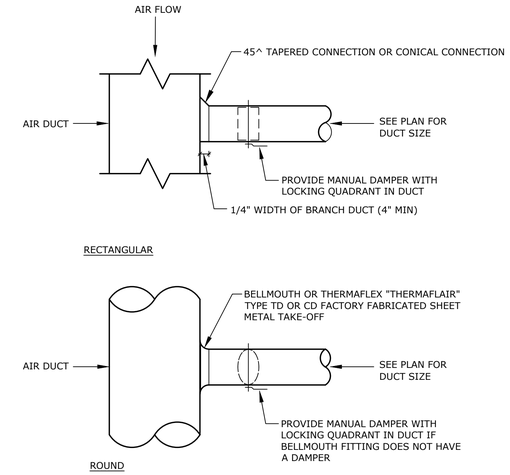

C / M003 TYPICAL BRANCH DUCT TAKE-OFF
NTS

DAIKIN
Piping diagrams
Piping CU 1

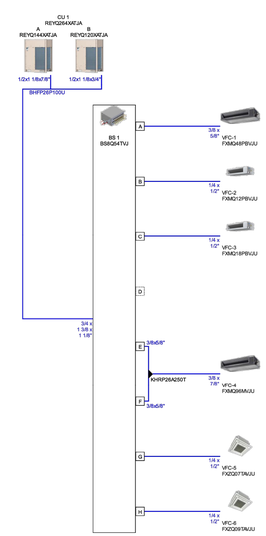

Piping

Warning: The pipe diameter values are purely indicative. Depending on the required pipe lengths, a different pipe diameter might be required.

The VRV Selection application is property of Daikin Europe N.V. Daikin Europe N.V. cannot be held liable for any inaccuracy, reliability of the outcome of the VRV Selection application.

G / M003 VRF PIPING SCHEMATIC (FOR REFERENCE)
NTS

PROFESSIONAL ENGINEER - STATE OF NEVADA
DUSTIN T. HART
Exp: 6/30/2023
MECHANICAL
No. 24362
MAY 24 2021

msa
ENGINEERING CONSULTANTS
370 E Windmill Lane, Suite 100
Las Vegas, NV 89123
702.896.1100
msa-ec.com
MSA #L20211

IZ design studio
design...sustainability...architecture.
tel. 702.441.0026
Fax. 702.475.4755
www.izdesignstudio.com
7229 W. Sahara Ave Suite 102
Las Vegas, NV 89117
Nevada

DIAGRAMS
Southern Nevada Health District
SNHD LAB EXPANSION
700 South Martin Luther King Blvd.
Las Vegas, Nevada 89106

Sheet Name	
Project Name	

DELTA NO.	REVISION NO.	DESCRIPTION	DATE

Project Number	20427
Date	05/24/2021
Drawn By	MSA
Checked By	PE

M003

IECC COMPLIANCE CERTIFICATE

COM*check* Software Version 4.1.5.1

Mechanical Compliance Certificate

Project Information

Energy Code:	2018 IECC
Project Title:	SNHD LAB EXPANSION
Location:	Las Vegas, Nevada
Climate Zone:	3b
Project Type:	New Construction

Construction Site:	Owner/Agent:	Designer/Contractor:
700 South Martin Luther King Blvd. Las Vegas, NV 89106		

Additional Efficiency Package(s)

Unspecified

Mechanical Systems List

Quantity	System Type & Description
1	VCU-1 (Single Zone): VRF Condensing Unit, Air Cooled w/ Heat Recovery Heat Pump Heating Mode: Capacity = 244 kBtu/h, No minimum efficiency requirement applies Cooling Mode: Capacity = 203 kBtu/h, No minimum efficiency requirement applies Fan System: None
1	VFC-1 (Single Zone): Cooling: 1 each - VRF Zone Fan Unit, Capacity = 40 kBtu/h, No Economizer, Economizer exception: High Efficiency Equipment No minimum efficiency requirement applies Fan System: VFC-1 -- Compliance (Motor nameplate HP method) : Passes Fans: FAN 1 Supply, Constant Volume, 1375 CFM, 0.3 motor nameplate hp, 0.0 fan efficiency grade
1	VFC-2 (Single Zone): Cooling: 1 each - VRF Zone Fan Unit, Capacity = 10 kBtu/h, No Economizer, Economizer exception: High Efficiency Equipment No minimum efficiency requirement applies Fan System: VFC-2 -- Compliance (Motor nameplate HP method) : Passes Fans: FAN 2 Supply, Constant Volume, 430 CFM, 0.3 motor nameplate hp, 0.0 fan efficiency grade
1	VFC-3 (Single Zone): Cooling: 1 each - VRF Zone Fan Unit, Capacity = 15 kBtu/h, No Economizer, Economizer exception: High Efficiency Equipment No minimum efficiency requirement applies Fan System: VFC-3 -- Compliance (Motor nameplate HP method) : Passes Fans: FAN 3 Supply, Constant Volume, 635 CFM, 0.3 motor nameplate hp, 0.0 fan efficiency grade
1	VFC-4 (Single Zone): Cooling: 1 each - VRF Zone Fan Unit, Capacity = 79 kBtu/h, No Economizer, Economizer exception: High Efficiency Equipment No minimum efficiency requirement applies Fan System: VFC-4 -- Compliance (Motor nameplate HP method) : Passes Fans: FAN 4 Supply, Constant Volume, 2540 CFM, 0.3 motor nameplate hp, 0.0 fan efficiency grade

---

Quantity	System Type & Description
1	VFC-5 (Single Zone): Cooling: 1 each - VRF Zone Fan Unit, Capacity = 6 kBtu/h, No Economizer, Economizer exception: High Efficiency Equipment No minimum efficiency requirement applies Fan System: VFC-5 -- Compliance (Motor nameplate HP method) : Passes Fans: FAN 5 Supply, Constant Volume, 305 CFM, 0.3 motor nameplate hp, 0.0 fan efficiency grade
1	VFC-6 (Single Zone): Cooling: 1 each - VRF Zone Fan Unit, Capacity = 8 kBtu/h, No Economizer, Economizer exception: High Efficiency Equipment No minimum efficiency requirement applies Fan System: VFC-6 -- Compliance (Motor nameplate HP method) : Passes Fans: FAN 6 Supply, Constant Volume, 315 CFM, 0.3 motor nameplate hp, 0.0 fan efficiency grade

Mechanical Compliance Statement

Compliance Statement: The proposed mechanical design represented in this document is consistent with the building plans, specifications, and other calculations submitted with this permit application. The proposed mechanical systems have been designed to meet the 2018 IECC requirements in COM*check* Version 4.1.5.1 and to comply with any applicable mandatory requirements listed in the Inspection Checklist.

Name - Title Signature Date

COM*check* Software Version 4.1.5.1

Inspection Checklist

Energy Code: 2018 IECC

Requirements: 0.0% were addressed directly in the COM*check* software

Text in the "Comments/Assumptions" column is provided by the user in the COMcheck Requirements screen. For each requirement, the user certifies that a code requirement will be met and how that is documented, or that an exception is being claimed. Where compliance is itemized in a separate table, a reference to that table is provided.

Section # & Req.ID	Plan Review	Complies?	Comments/Assumptions
C103.2 [PR2]^1	Plans, specifications, and/or calculations provide all information with which compliance can be determined for the mechanical systems and equipment and document where exceptions to the standard are claimed. Load calculations per acceptable engineering standards and handbooks.	☐Complies ☐Does Not ☐Not Observable ☐Not Applicable	
C406 [PR9]^1	Plans, specifications, and/or calculations provide all information with which compliance can be determined for the additional energy efficiency package options.	☐Complies ☐Does Not ☐Not Observable ☐Not Applicable	

Additional Comments/Assumptions:

Section # & Req.ID	Footing / Foundation Inspection	Complies?	Comments/Assumptions
C403.12.2, C403.12.3 [FO9]^3	Snow/ice melting system and freeze protection systems have sensors and controls configured to limit service for pavement temperature and outdoor temperature. future connection to controls.	☐Complies ☐Does Not ☐Not Observable ☐Not Applicable	

Additional Comments/Assumptions:

Section # & Req.ID	Plumbing Rough-In Inspection	Complies?	Comments/Assumptions
C404.5, C404.5.1, C404.5.2 [PL6]^3	Heated water supply piping conforms to pipe length and volume requirements. Refer to section details.	☐Complies ☐Does Not ☐Not Observable ☐Not Applicable	
C404.5, C404.5.1, C404.5.2 [PL6]^3	Heated water supply piping conforms to pipe length and volume requirements. Refer to section details.	☐Complies ☐Does Not ☐Not Observable ☐Not Applicable	
C404.5, C404.5.1, C404.5.2 [PL6]^3	Heated water supply piping conforms to pipe length and volume requirements. Refer to section details.	☐Complies ☐Does Not ☐Not Observable ☐Not Applicable	
C404.5, C404.5.1, C404.5.2 [PL6]^3	Heated water supply piping conforms to pipe length and volume requirements. Refer to section details.	☐Complies ☐Does Not ☐Not Observable ☐Not Applicable	
C404.5, C404.5.1, C404.5.2 [PL6]^3	Heated water supply piping conforms to pipe length and volume requirements. Refer to section details.	☐Complies ☐Does Not ☐Not Observable ☐Not Applicable	
C404.5, C404.5.1, C404.5.2 [PL6]^3	Heated water supply piping conforms to pipe length and volume requirements. Refer to section details.	☐Complies ☐Does Not ☐Not Observable ☐Not Applicable	
C404.5, C404.5.1, C404.5.2 [PL6]^3	Heated water supply piping conforms to pipe length and volume requirements. Refer to section details.	☐Complies ☐Does Not ☐Not Observable ☐Not Applicable	
C404.6.3 [PL7]^3	Pumps that circulate water between a heater and storage tank have controls that limit operation from startup to <= 5 minutes after end of heating cycle.	☐Complies ☐Does Not ☐Not Observable ☐Not Applicable	
C404.6.3 [PL7]^3	Pumps that circulate water between a heater and storage tank have controls that limit operation from startup to <= 5 minutes after end of heating cycle.	☐Complies ☐Does Not ☐Not Observable ☐Not Applicable	
C404.6.3 [PL7]^3	Pumps that circulate water between a heater and storage tank have controls that limit operation from startup to <= 5 minutes after end of heating cycle.	☐Complies ☐Does Not ☐Not Observable ☐Not Applicable	
C404.6.3 [PL7]^3	Pumps that circulate water between a heater and storage tank have controls that limit operation from startup to <= 5 minutes after end of heating cycle.	☐Complies ☐Does Not ☐Not Observable ☐Not Applicable	

Section # & Req.ID	Plumbing Rough-In Inspection	Complies?	Comments/Assumptions
C404.6.3 [PL7]^3	Pumps that circulate water between a heater and storage tank have controls that limit operation from startup to <= 5 minutes after end of heating cycle.	☐Complies ☐Does Not ☐Not Observable ☐Not Applicable	
C404.6.3 [PL7]^3	Pumps that circulate water between a heater and storage tank have controls that limit operation from startup to <= 5 minutes after end of heating cycle.	☐Complies ☐Does Not ☐Not Observable ☐Not Applicable	
C404.6.3 [PL7]^3	Pumps that circulate water between a heater and storage tank have controls that limit operation from startup to <= 5 minutes after end of heating cycle.	☐Complies ☐Does Not ☐Not Observable ☐Not Applicable	
C404.7 [PL8]^3	Demand recirculation water systems have controls that start the pump upon receiving a signal from the action of a user of a fixture or appliance and limits the temperature of the water entering the cold-water piping to 104°F.	☐Complies ☐Does Not ☐Not Observable ☐Not Applicable	
C404.7 [PL8]^3	Demand recirculation water systems have controls that start the pump upon receiving a signal from the action of a user of a fixture or appliance and limits the temperature of the water entering the cold-water piping to 104°F.	☐Complies ☐Does Not ☐Not Observable ☐Not Applicable	
C404.7 [PL8]^3	Demand recirculation water systems have controls that start the pump upon receiving a signal from the action of a user of a fixture or appliance and limits the temperature of the water entering the cold-water piping to 104°F.	☐Complies ☐Does Not ☐Not Observable ☐Not Applicable	
C404.7 [PL8]^3	Demand recirculation water systems have controls that start the pump upon receiving a signal from the action of a user of a fixture or appliance and limits the temperature of the water entering the cold-water piping to 104°F.	☐Complies ☐Does Not ☐Not Observable ☐Not Applicable	
C404.7 [PL8]^3	Demand recirculation water systems have controls that start the pump upon receiving a signal from the action of a user of a fixture or appliance and limits the temperature of the water entering the cold-water piping to 104°F.	☐Complies ☐Does Not ☐Not Observable ☐Not Applicable	
C404.7 [PL8]^3	Demand recirculation water systems have controls that start the pump upon receiving a signal from the action of a user of a fixture or appliance and limits the temperature of the water entering the cold-water piping to 104°F.	☐Complies ☐Does Not ☐Not Observable ☐Not Applicable	

Section # & Req.ID	Plumbing Rough-In Inspection	Complies?	Comments/Assumptions
C404.7 [PL8]^3	Demand recirculation water systems have controls that start the pump upon receiving a signal from the action of a user of a fixture or appliance and limits the temperature of the water entering the cold-water piping to 104°F.	☐Complies ☐Does Not ☐Not Observable ☐Not Applicable	

Additional Comments/Assumptions:

Section # & Req.ID	Mechanical Rough-In Inspection	Complies?	Comments/Assumptions
C402.2.6 [ME41]^3	Thermally ineffective panel surfaces of sensible heating panels have insulation >= R-3.5.	☐Complies ☐Does Not ☐Not Observable ☐Not Applicable	
C403.11.3 [ME61]^2	HVAC piping insulation insulated in accordance with Table C403.11.3. Insulation exposed to weather is protected from damage and is provided with shielding from solar radiation.	☐Complies ☐Does Not ☐Not Observable ☐Not Applicable	
C403.11.3 [ME61]^2	HVAC piping insulation insulated in accordance with Table C403.11.3. Insulation exposed to weather is protected from damage and is provided with shielding from solar radiation.	☐Complies ☐Does Not ☐Not Observable ☐Not Applicable	
C403.11.3 [ME61]^2	HVAC piping insulation insulated in accordance with Table C403.11.3. Insulation exposed to weather is protected from damage and is provided with shielding from solar radiation.	☐Complies ☐Does Not ☐Not Observable ☐Not Applicable	
C403.11.3 [ME61]^2	HVAC piping insulation insulated in accordance with Table C403.11.3. Insulation exposed to weather is protected from damage and is provided with shielding from solar radiation.	☐Complies ☐Does Not ☐Not Observable ☐Not Applicable	
C403.11.3 [ME61]^2	HVAC piping insulation insulated in accordance with Table C403.11.3. Insulation exposed to weather is protected from damage and is provided with shielding from solar radiation.	☐Complies ☐Does Not ☐Not Observable ☐Not Applicable	
C403.11.3 [ME61]^2	HVAC piping insulation insulated in accordance with Table C403.11.3. Insulation exposed to weather is protected from damage and is provided with shielding from solar radiation.	☐Complies ☐Does Not ☐Not Observable ☐Not Applicable	
C403.11.3 [ME61]^2	HVAC piping insulation insulated in accordance with Table C403.11.3. Insulation exposed to weather is protected from damage and is provided with shielding from solar radiation.	☐Complies ☐Does Not ☐Not Observable ☐Not Applicable	
C403.8.1 [ME65]^3	HVAC fan systems at design conditions do not exceed allowable fan system motor nameplate hp or fan system bhp.	☐Complies ☐Does Not ☐Not Observable ☐Not Applicable	*See the Mechanical Systems list for values.*
C403.8.3 [ME117]^2	Fans have efficiency grade (FEG) >= 67. The total efficiency of the fan at the design point of operation <= 15% of maximum total efficiency of the fan.	☐Complies ☐Does Not ☐Not Observable ☐Not Applicable	
C403.8.4 [ME142]^2	Motors for fans that are not less than 1/12 hp and less than 1 hp are electronically commutated motors or have a minimum motor efficiency of 70 percent. These motors have the means to adjust motor speed.	☐Complies ☐Does Not ☐Not Observable ☐Not Applicable	

Section # & Req.ID	Mechanical Rough-In Inspection	Complies?	Comments/Assumptions
C403.8.4 [ME142]^2	Motors for fans that are not less than 1/12 hp and less than 1 hp are electronically commutated motors or have a minimum motor efficiency of 70 percent. These motors have the means to adjust motor speed.	☐Complies ☐Does Not ☐Not Observable ☐Not Applicable	
C403.8.4 [ME142]^2	Motors for fans that are not less than 1/12 hp and less than 1 hp are electronically commutated motors or have a minimum motor efficiency of 70 percent. These motors have the means to adjust motor speed.	☐Complies ☐Does Not ☐Not Observable ☐Not Applicable	
C403.8.4 [ME142]^2	Motors for fans that are not less than 1/12 hp and less than 1 hp are electronically commutated motors or have a minimum motor efficiency of 70 percent. These motors have the means to adjust motor speed.	☐Complies ☐Does Not ☐Not Observable ☐Not Applicable	
C403.8.4 [ME142]^2	Motors for fans that are not less than 1/12 hp and less than 1 hp are electronically commutated motors or have a minimum motor efficiency of 70 percent. These motors have the means to adjust motor speed.	☐Complies ☐Does Not ☐Not Observable ☐Not Applicable	
C403.8.4 [ME142]^2	Motors for fans that are not less than 1/12 hp and less than 1 hp are electronically commutated motors or have a minimum motor efficiency of 70 percent. These motors have the means to adjust motor speed.	☐Complies ☐Does Not ☐Not Observable ☐Not Applicable	
C403.8.5 [ME143]^2	Each DX cooling system > 65 kBtu and chiller water/evaporative cooling system with fans > 1/4 hp are designed to vary the indoor fan airflow as a function of load and comply with detailed requirements of this section.	☐Complies ☐Does Not ☐Not Observable ☐Not Applicable	
C403.8.5 [ME143]^2	Each DX cooling system > 65 kBtu and chiller water/evaporative cooling system with fans > 1/4 hp are designed to vary the indoor fan airflow as a function of load and comply with detailed requirements of this section.	☐Complies ☐Does Not ☐Not Observable ☐Not Applicable	
C403.8.5 [ME143]^2	Each DX cooling system > 65 kBtu and chiller water/evaporative cooling system with fans > 1/4 hp are designed to vary the indoor fan airflow as a function of load and comply with detailed requirements of this section.	☐Complies ☐Does Not ☐Not Observable ☐Not Applicable	
C403.8.5 [ME143]^2	Each DX cooling system > 65 kBtu and chiller water/evaporative cooling system with fans > 1/4 hp are designed to vary the indoor fan airflow as a function of load and comply with detailed requirements of this section.	☐Complies ☐Does Not ☐Not Observable ☐Not Applicable	
C403.8.5 [ME143]^2	Each DX cooling system > 65 kBtu and chiller water/evaporative cooling system with fans > 1/4 hp are designed to vary the indoor fan airflow as a function of load and comply with detailed requirements of this section.	☐Complies ☐Does Not ☐Not Observable ☐Not Applicable	

Section # & Req.ID	Mechanical Rough-In Inspection	Complies?	Comments/Assumptions
C403.8.5 [ME143]^2	Each DX cooling system > 65 kBtu and chiller water/evaporative cooling system with fans > 1/4 hp are designed to vary the indoor fan airflow as a function of load and comply with detailed requirements of this section.	☐Complies ☐Does Not ☐Not Observable ☐Not Applicable	
C403.12.1 [ME71]^2	Systems that heat outside the building envelope are radiant heat systems controlled by an occupancy sensing device or timer switch.	☐Complies ☐Does Not ☐Not Observable ☐Not Applicable	
C403.2.3 [ME55]^2	HVAC equipment efficiency verified.	☐Complies ☐Does Not ☐Not Observable ☐Not Applicable	*See the Mechanical Systems list for values.*
C403.2.2 [ME59]^1	Natural or mechanical ventilation is provided in accordance with International Mechanical Code Chapter 4. Mechanical ventilation has capability to reduce outdoor air supply to minimum per IMC Chapter 4.	☐Complies ☐Does Not ☐Not Observable ☐Not Applicable	
C403.7.1 [ME59]^1	Demand control ventilation provided for spaces >500 ft2 and >25 people/1000 ft2 occupant density and served by systems with air side economizer, auto modulating outside air damper control, or design airflow >3,000 cfm.	☐Complies ☐Does Not ☐Not Observable ☐Not Applicable	
C403.7.2 [ME115]^3	Enclosed parking garage ventilation has automatic contaminant detection and capacity to stage or modulate fans to 50% or less of design capacity.	☐Complies ☐Does Not ☐Not Observable ☐Not Applicable	
C403.7.6 [ME141]^3	HVAC systems serving guestrooms in Group R-1 buildings with > 50 guestrooms: Each guestroom is provided with controls that automatically manage temperature setpoint and ventilation (see sections C403.7.6.1 and C403.7.6.2).	☐Complies ☐Does Not ☐Not Observable ☐Not Applicable	
C403.7.4 [ME57]^1	Exhaust air energy recovery on systems meeting Table C403.7.4(1) and C403.7.4(2).	☐Complies ☐Does Not ☐Not Observable ☐Not Applicable	
C403.7.5 [ME116]^3	Kitchen exhaust systems comply with replacement air and conditioned supply air limitations, and satisfy hood rating requirements and maximum exhaust rate criteria.	☐Complies ☐Does Not ☐Not Observable ☐Not Applicable	
C403.11.1, C403.11.2 [ME60]^2	HVAC ducts and plenums insulated in accordance with C403.11.1 and constructed in accordance with C403.11.2, verification may need to occur during Foundation Inspection.	☐Complies ☐Does Not ☐Not Observable ☐Not Applicable	

Section # & Req.ID	Mechanical Rough-In Inspection	Complies?	Comments/Assumptions
C403.4.3.3.2 [ME121]^3	Closed-circuit cooling tower within heat pump loop have either automatic bypass valve or lower leakage positive closure dampers. Open-circuit tower within heat pump loop have automatic valve to bypass all heat pump water flow around the tower. Open- or closed-circuit cooling towers used in conjunction with a separate heat exchanger have heat loss by shutting down the circulation pump on the cooling tower loop. Open- or closed circuit cooling towers have a separate heat exchanger to isolate the cooling tower from the heat pump loop, and heat loss is controlled by shutting down the circulation pump on the cooling tower loop.	☐Complies ☐Does Not ☐Not Observable ☐Not Applicable	
C403.4.1.4 [ME63]^2	Heating for vestibules and air curtains with integral heating include automatic controls that shut off the heating system when outdoor air temperatures > 45F. Vestibule heating and cooling systems controlled by a thermostat in the vestibule with heating setpoint <= 60F and cooling setpoint >= 80F.	☐Complies ☐Does Not ☐Not Observable ☐Not Applicable	
C408.2.2.1 [ME53]^3	Air outlets and zone terminal devices have means for air balancing.	☐Complies ☐Does Not ☐Not Observable ☐Not Applicable	
C403.5, C403.5.1, C403.5.2 [ME123]^3	Refrigerated display cases, walk-in coolers or walk-in freezers served by remote compressors and remote condensers not located in a condensing unit, have fan-powered condensers that comply with Sections C403.5.1 and refrigeration compressor systems that comply with C403.5.2..	☐Complies ☐Does Not ☐Not Observable ☐Not Applicable	

Additional Comments/Assumptions:

Section # & Req.ID	Rough-In Electrical Inspection	Complies?	Comments/Assumptions
C405.6 [EL26]^2	Low-voltage dry-type distribution electric transformers meet the minimum efficiency requirements of Table C405.6.	☐Complies ☐Does Not ☐Not Observable ☐Not Applicable	
C405.7 [EL27]^2	Electric motors meet the minimum efficiency requirements of Tables C405.7(1) through C405.7(4). Efficiency verified through certification under an approved certification program or the equipment efficiency ratings shall be provided by motor manufacturer (where certification programs do not exist).	☐Complies ☐Does Not ☐Not Observable ☐Not Applicable	
C405.8.2, C405.8.2.1 [EL28]^2	Escalators and moving walks comply with ASME A17.1/CSA B44 and have automatic controls configured to reduce speed to the minimum permitted speed in accordance with ASME A17.1/CSA B44 or applicable local code when not conveying passengers.	☐Complies ☐Does Not ☐Not Observable ☐Not Applicable	
C405.9 [EL29]^2	Total voltage drop across the combination of feeders and branch circuits <= 5%.	☐Complies ☐Does Not ☐Not Observable ☐Not Applicable	

Additional Comments/Assumptions:

Section # & Req.ID	Final Inspection	Complies?	Comments/Assumptions
C303.3, C408.2.5.3 [FI8]^3	Furnished O&M manuals for HVAC systems within 90 days of system acceptance.	☐Complies ☐Does Not ☐Not Observable ☐Not Applicable	
C403.2.2 [FI27]^3	HVAC systems and equipment capacity does not exceed calculated loads.	☐Complies ☐Does Not ☐Not Observable ☐Not Applicable	
C403.2.4.1 [FI47]^3	Heating and cooling to each zone is controlled by a thermostat control. Minimum one humidity control device per installed humidification/dehumidification system.	☐Complies ☐Does Not ☐Not Observable ☐Not Applicable	
C403.2.4.1 [FI47]^3	Heating and cooling to each zone is controlled by a thermostat control. Minimum one humidity control device per installed humidification/dehumidification system.	☐Complies ☐Does Not ☐Not Observable ☐Not Applicable	
C403.2.4.1 [FI47]^3	Heating and cooling to each zone is controlled by a thermostat control. Minimum one humidity control device per installed humidification/dehumidification system.	☐Complies ☐Does Not ☐Not Observable ☐Not Applicable	
C403.2.4.1 [FI47]^3	Heating and cooling to each zone is controlled by a thermostat control. Minimum one humidity control device per installed humidification/dehumidification system.	☐Complies ☐Does Not ☐Not Observable ☐Not Applicable	
C403.2.4.1 [FI47]^3	Heating and cooling to each zone is controlled by a thermostat control. Minimum one humidity control device per installed humidification/dehumidification system.	☐Complies ☐Does Not ☐Not Observable ☐Not Applicable	
C403.2.4.1 [FI47]^3	Heating and cooling to each zone is controlled by a thermostat control. Minimum one humidity control device per installed humidification/dehumidification system.	☐Complies ☐Does Not ☐Not Observable ☐Not Applicable	
C403.2.4.1 [FI47]^3	Heating and cooling to each zone is controlled by a thermostat control. Minimum one humidity control device per installed humidification/dehumidification system.	☐Complies ☐Does Not ☐Not Observable ☐Not Applicable	
C403.2.4.1.1 [FI42]^3	Heat pump controls prevent supplemental electric resistance heat from coming on when not needed.	☐Complies ☐Does Not ☐Not Observable ☐Not Applicable	
C403.4.1.2 [FI38]^3	Thermostatic controls have a 5 °F deadband.	☐Complies ☐Does Not ☐Not Observable ☐Not Applicable	

Section # & Req.ID	Final Inspection	Complies?	Comments/Assumptions
C403.2.4.1.3 [FI20]^3	Temperature controls have setpoint overlap restrictions.	☐Complies ☐Does Not ☐Not Observable ☐Not Applicable	
C403.2.4.2 [FI39]^3	Each zone equipped with setback controls using automatic time clock or programmable control system.	☐Complies ☐Does Not ☐Not Observable ☐Not Applicable	
C403.2.4.2.1, C403.2.4.2.2 [FI40]^3	Automatic Controls: Setback to 55°F (heat) and 85°F (cool); 7-day clock, 2-hour occupant override, 10-hour backup	☐Complies ☐Does Not ☐Not Observable ☐Not Applicable	
C403.2.4.2.3 [FI41]^3	Systems include optimum start controls.	☐Complies ☐Does Not ☐Not Observable ☐Not Applicable	
C403.2.4.2.3 [FI41]^3	Systems include optimum start controls.	☐Complies ☐Does Not ☐Not Observable ☐Not Applicable	
C403.2.4.2.3 [FI41]^3	Systems include optimum start controls.	☐Complies ☐Does Not ☐Not Observable ☐Not Applicable	
C403.2.4.2.3 [FI41]^3	Systems include optimum start controls.	☐Complies ☐Does Not ☐Not Observable ☐Not Applicable	
C403.2.4.2.3 [FI41]^3	Systems include optimum start controls.	☐Complies ☐Does Not ☐Not Observable ☐Not Applicable	
C403.2.4.2.3 [FI41]^3	Systems include optimum start controls.	☐Complies ☐Does Not ☐Not Observable ☐Not Applicable	
C408.1.1 [FI57]^1	Building operations and maintenance documents will be provided to the owner. Documents will cover manufacturers' information, specifications, programming procedures and means of illustrating to owner how building, equipment and systems are intended to be installed, maintained, and operated.	☐Complies ☐Does Not ☐Not Observable ☐Not Applicable	
C408.2.1 [FI28]^1	Commissioning plan developed by registered design professional or approved agency.	☐Complies ☐Does Not ☐Not Observable ☐Not Applicable	
C408.2.3.1 [FI31]^1	HVAC equipment has been tested to ensure proper operation.	☐Complies ☐Does Not ☐Not Observable ☐Not Applicable	

Section # & Req.ID	Final Inspection	Complies?	Comments/Assumptions
C408.2.3.2 [FI10]^1	HVAC control systems have been tested to ensure proper operation, calibration and adjustment of controls.	☐Complies ☐Does Not ☐Not Observable ☐Not Applicable	
C408.2.4 [FI29]^1	Preliminary commissioning report completed and certified by registered design professional or approved agency.	☐Complies ☐Does Not ☐Not Observable ☐Not Applicable	
C408.2.5.1 [FI7]^3	Furnished HVAC as-built drawings submitted within 90 days of system acceptance.	☐Complies ☐Does Not ☐Not Observable ☐Not Applicable	
C408.2.5.3 [FI43]^1	An air and/or hydronic system balancing report is provided for HVAC systems.	☐Complies ☐Does Not ☐Not Observable ☐Not Applicable	
C408.2.5.4 [FI30]^1	Final commissioning report due to building owner within 90 days of receipt of certificate of occupancy.	☐Complies ☐Does Not ☐Not Observable ☐Not Applicable	

Additional Comments/Assumptions:

IZ design studio
design . sustainability . architecture
7229 W. Sahara Ave Suite 120
Las Vegas, NV 89117
tel. 702.441.0026
fax. 702.475.4785
www.izdesignstudio.com

COMPLIANCE CERTIFICATE
Southern Nevada Health District
SNHD LAB EXPANSION
700 South Martin Luther King Blvd.
Las Vegas, Nevada 89106

Sheet Name

Project Name

DELTA NO.	REVISION NO.	DESCRIPTION	DATE

DUSTIN T. HART
Exp: 6/30/2023
No. 24362
MAY 24 2021

msa
ENGINEERING CONSULTANTS
370 E Windmill Lane, Suite 100
Las Vegas, NV 89123
702.896.1100
msa-ec.com

MSA #L20211

Project Number	20427
Date	05/24/2021
Drawn By	MSA
Checked By	PE

M004

DEMOLITION NOTES:

1. EQUIPMENT AND PIPING LOCATIONS SHOWN FROM BEST AVAILABLE INFORMATION. CONTRACTOR SHALL FIELD VERIFY SIZES AND LOCATIONS.
2. EQUIPMENT THAT IS BEING REMOVED SHALL BECOME THE PROPERTY OF THE CONTRACTOR AND SHALL BE REMOVED FROM THE JOB SITE, EXCEPT EQUIPMENT SELECTED BY OWNER. OWNER SELECTED EQUIPMENT WILL BE TAGGED AND SHALL BE MOVED BY CONTRACTOR TO OWNER'S STORAGE ON SITE.
3. WHERE PIPING OR DUCTWORK IS TO BE CUT OFF AT A POINT, IT SHALL BE CAPPED OR BLANKED OFF AT THAT POINT. INSULATION ON REMAINING PIPE OR DUCT TO BE REPAIRED TO NEW CONDITION.
4. PIPING CONNECTED TO EQUIPMENT THAT IS BEING REMOVED SHALL BE CUT AND CAPPED IN WALLS, FLOORS OR CEILING SO AS NOT TO INTERFERE WITH NEW CONSTRUCTION OR EQUIPMENT.

SHEET NOTES:

1. REMOVE EXISTING RTU AND ASSOCIATED DUCTWORK, GRILLES, DIFFUSERS AND ALL APPURTENANCES. REMOVE GAS PIPING BACK TO BELOW CEILING AND CAP. PATCH AND REPAIR ROOF AS NEEDED. FIELD VERIFY EXACT LOCATION AND REQUIREMENTS PRIOR TO COMMENCING WORK.
2. REMOVE DIFFUSER/REGISTER/GRILLE AND ASSOCIATED APPURTENANCES. FIELD VERIFY EXACT LOCATION AND QUANTITY PRIOR TO COMMENCING WORK.
3. RELOCATE RETURN GRILLE PER NEW WORK PLAN. FIELD VERIFY EXACT LOCATION AND QUANTITY PRIOR TO COMMENCING WORK.

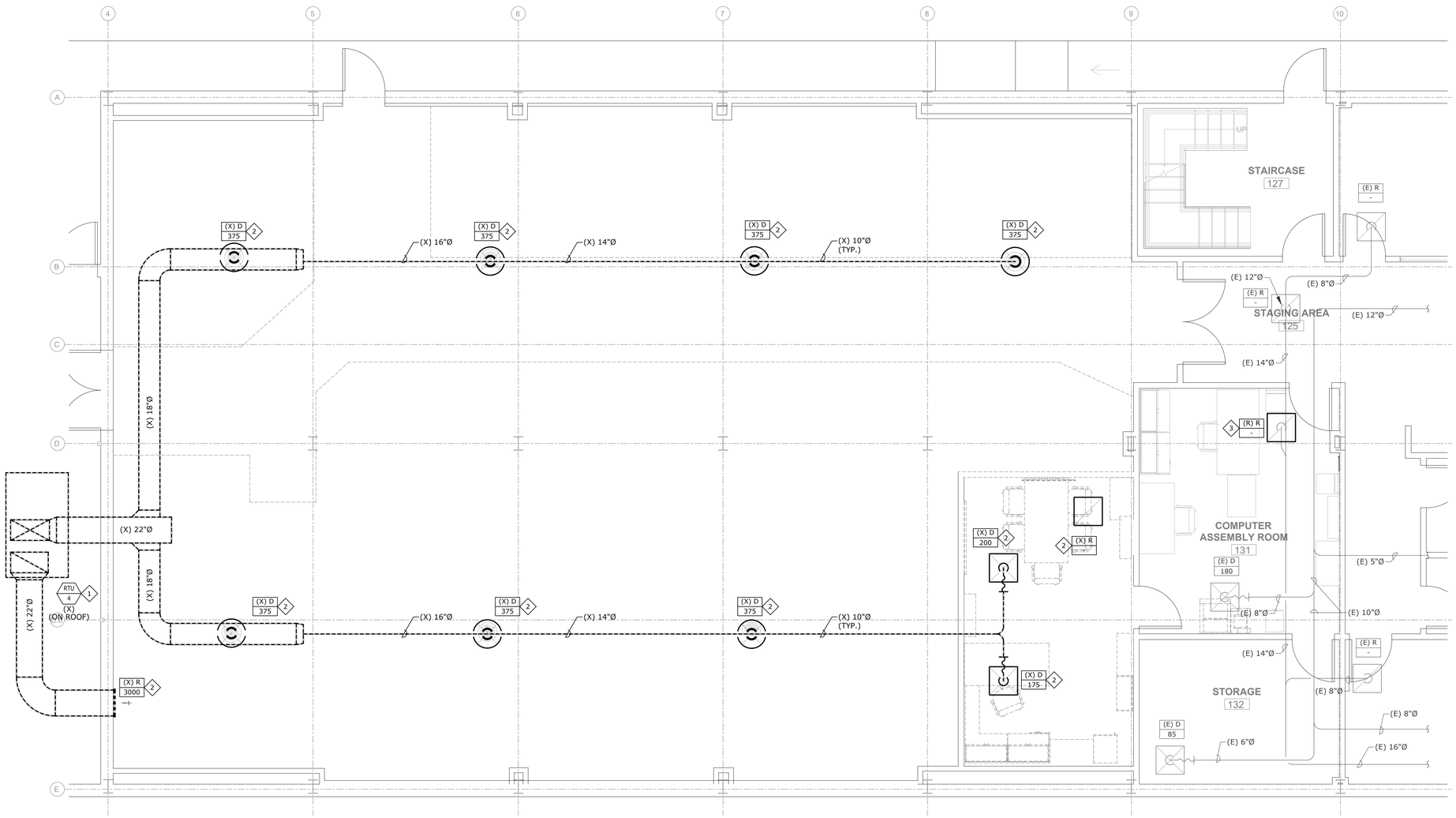

A
MD100

MECHANICAL DEMOLITION PLAN
1/4" = 1'-0"

0' 1' 2' 4' 8'

NORTH

PROFESSIONAL ENGINEER - STATE OF NEVADA
DUSTIN T. HART
Exp. 6/30/2023
MECHANICAL
NO. 24362

MAY 24 2021

msa.
ENGINEERING CONSULTANTS
370 E Windmill Lane, Suite 100
Las Vegas, NV 89123
702.896.1100
msa-ec.com
MSA #L20211

IZ design studio
design...sustainability...architecture.

tel. 702.441.0026
Fax. 702.475.4755
www.izdesignstudio.com

7229 W. Sahara Ave Suite 100
Las Vegas, Nevada 89117

MECHANICAL DEMOLITION PLAN

Southern Nevada Health District

SNHD LAB EXPANSION

700 South Martin Luther King Blvd.
Las Vegas, Nevada 89106

DELTA NO.	REVISION NO.	DESCRIPTION	DATE

Sheet Name

Project Name

Project Number	20427
Date	05/24/2021
Drawn By	MSA
Checked By	PE

MD100

DEMOLITION NOTES:

1. EQUIPMENT AND PIPING LOCATIONS SHOWN FROM BEST AVAILABLE INFORMATION. CONTRACTOR SHALL FIELD VERIFY SIZES AND LOCATIONS.
2. EQUIPMENT THAT IS BEING REMOVED SHALL BECOME THE PROPERTY OF THE CONTRACTOR AND SHALL BE REMOVED FROM THE JOB SITE, EXCEPT EQUIPMENT SELECTED BY OWNER. OWNER SELECTED EQUIPMENT WILL BE TAGGED AND SHALL BE MOVED BY CONTRACTOR TO OWNER'S STORAGE ON SITE.
3. WHERE PIPING OR DUCTWORK IS TO BE CUT OFF AT A POINT, IT SHALL BE CAPPED OR BLANKED OFF AT THAT POINT. INSULATION ON REMAINING PIPE OR DUCT TO BE REPAIRED TO NEW CONDITION.
4. PIPING CONNECTED TO EQUIPMENT THAT IS BEING REMOVED SHALL BE CUT AND CAPPED IN WALLS, FLOORS OR CEILING SO AS NOT TO INTERFERE WITH NEW CONSTRUCTION OR EQUIPMENT.

SHEET NOTES:

1. REMOVE EXISTING ROOFTOP UNIT AND ASSOCIATED APPURTENANCES. REMOVE ROOF CURB AND PATCH/REPAIR ROOF TO MATCH EXISTING. FIELD VERIFY EXACT LOCATION AND REQUIREMENTS PRIOR TO COMMENCING WORK.

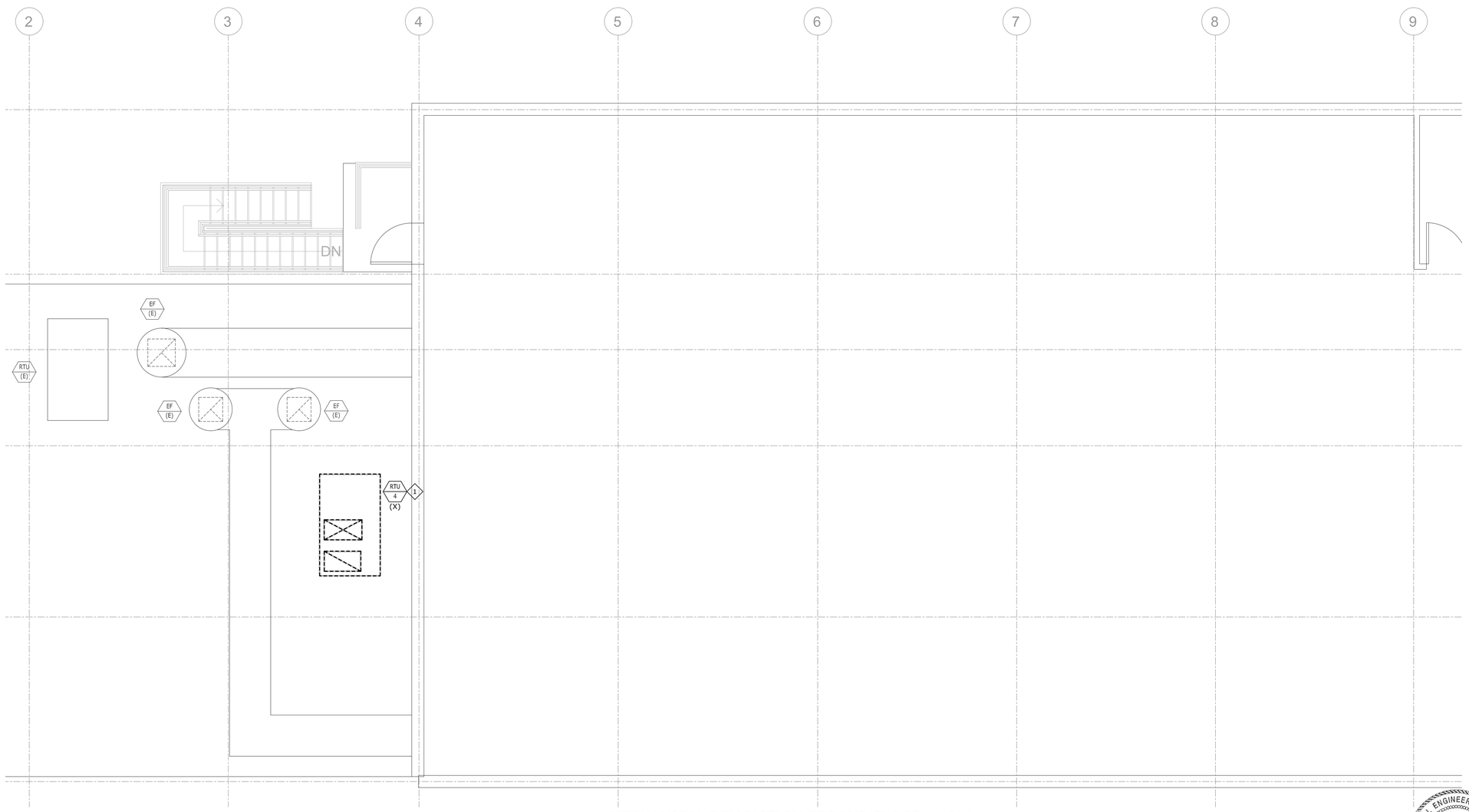

A
MD400

MECHANICAL DEMOLITION SECOND FLOOR - LOW ROOF PLAN

1/4" = 1'-0"

0' 1' 2' 4' 8'

NORTH

PROFESSIONAL ENGINEER-STATE OF NEVADA
DUSTIN T. HART
Exp: 6/30/2023
MECHANICAL
No. 24362

MAY 24 2021

msa.
ENGINEERING CONSULTANTS
370 E Windmill Lane, Suite 100
Las Vegas, NV 89123
702.896.1100
msa-ec.com
MSA #L20211

IZ design studio
design...sustainability...architecture.

tel. 702.441.0026
Fax. 702.475.4755
www.izdesignstudio.com

7229 W. Sahara Ave Suite 100
Las Vegas, NV 89117
Nevada

Sheet Name

MECHANICAL DEMOLITION SECOND FLOOR - LOW ROOF PLAN

Project Name

SNHD LAB EXPANSION

Southern Nevada Health District

700 South Martin Luther King Blvd.
Las Vegas, Nevada 89106

DELTA NO.	REVISION NO.	DESCRIPTION	DATE

Project Number	20427
Date	05/24/2021
Drawn By	MSA
Checked By	PE

MD400

GENERAL NOTES:

1. ACCESS DOORS ARE REQUIRED FOR ALL DAMPERS INSTALLED ABOVE INACCESSIBLE CEILINGS. COORDINATE EXACT LOCATION OF ALL ACCESS DOORS WITH ARCHITECT PRIOR TO INSTALLATION.
2. VERIFY LOCATION OF ALL THERMOSTATS WITH ARCHITECT PRIOR TO INSTALLATION. MOUNT ALL THERMOSTATS @48" A.F.F. IN ACCORDANCE WITH ADA STANDARDS. PROVIDE LOCKING COVERS FOR T-STATS.
3. VERIFY AND COORDINATE FRAME AND BORDER TYPE REQUIREMENTS FOR AIR DEVICES WITH ARCHITECTURAL CEILING PLANS PRIOR TO ORDERING.
4. DUCT SIZES SHOWN ARE THE CLEAR INSIDE DIMENSIONS.
5. THE MECHANICAL CONTRACTOR SHALL VERIFY THE LOCATION OF ALL ROOF MOUNTED EQUIPMENT AND ROOF PENETRATIONS WITH ARCHITECT AND STRUCTURAL ENGINEER PRIOR TO COMMENCING WORK.
6. THE MECHANICAL CONTRACTOR SHALL COORDINATE LOCATION AND ROUTING OF HVAC EQUIPMENT AND DUCTWORK WITH OTHER TRADES PRIOR TO COMMENCING WORK.
7. ALL EXHAUST OUTLETS SHALL BE LOCATED MIN. OF 10'-0" FROM ANY OUTSIDE AIR INTAKES.
8. THE CUTTING, NOTCHING AND BORING OF HOLES IN FLOOR JOIST AND WALL STUDS SHALL BE IN ACCORDANCE WITH THE LATEST APPROVED EDITION OF THE INTERNATIONAL BUILDING CODE.
9. CONTRACTOR SHALL BE RESPONSIBLE FOR ALL CUTTING AND PATCHING AS REQUIRED TO ACCOMMODATE HIS WORK.
10. REFER TO THE MECHANICAL DIAGRAMS THAT APPLY TO THE WORK ON THIS DRAWING. THESE DIAGRAMS PROVIDE GUIDANCE AS TO INSTALLATION INTENT AND DO NOT NECESSARILY SHOW ALL COMPONENTS REQUIRED.

SHEET NOTES:

1. ENSURE THAT UNIT IS INSTALLED SUCH THAT FILTERS ARE EASILY MAINTAINABLE.
2. PROVIDE THERMOSTAT AND WIRING/CONDUIT UP TO FAN COIL UNIT AS INDICATED.
3. ROUTE 16"Ø EXHAUST DUCT UP THROUGH ROOF. TERMINATE ON ROOF WITH GOOSENECK.
4. ROUTE OUTSIDE AIR DUCT THROUGH EXTERIOR WALL. TERMINATE WITH 24"X24" GREENHECK MODEL ESD-403 DRAINABLE LOUVER, OR EQUAL.
5. RELOCATE RETURN GRILLE AS INDICATED. MODIFY DUCTWORK AS REUQIRED TO SUIT NEW LOCATION.
6. OPEN ENDED RETURN DUCT. TERMINATE WITH WIRE-MESH SCREEN.

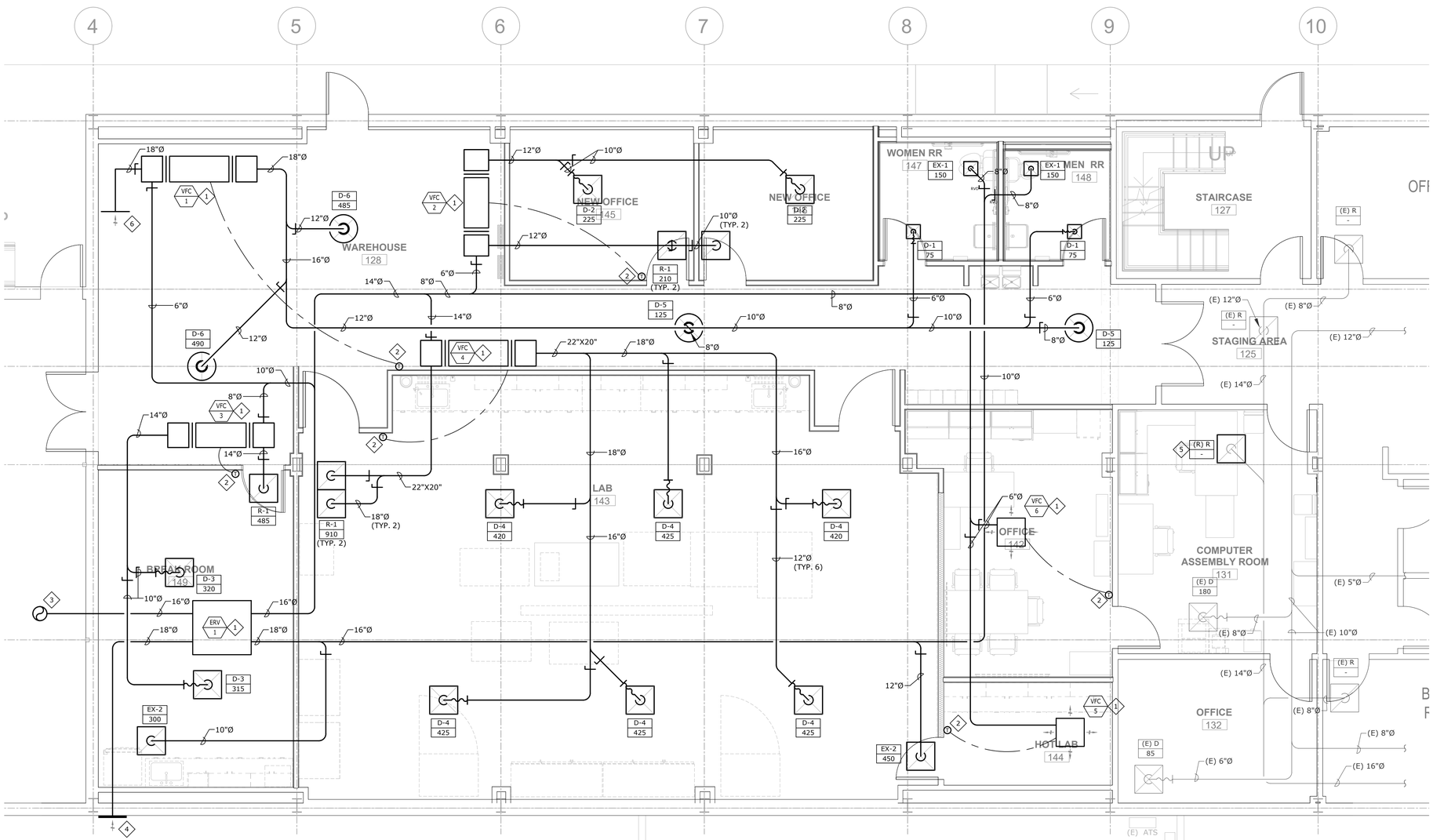

A
M100
MECHANICAL PLAN
1/4" = 1'-0"

0' 1' 2' 4' 8'

MAY 24 2021

msa.
ENGINEERING CONSULTANTS
370 E Windmill Lane, Suite 100
Las Vegas, NV 89123
702.896.1100
msa-ec.com
MSA #L20211

IZ design studio
design...sustainability...architecture.
tel. 702.441.0026
Fax. 702.475.4755
www.izdesignstudio.com
7229 W. Sahara Ave Suite 170
Las Vegas, NV 89117
Nevada

MECHANICAL PLAN
Southern Nevada Health District
SNHD LAB EXPANSION
700 South Martin Luther King Blvd.
Las Vegas, Nevada 89106

DELTA NO.	REVISION NO.	DESCRIPTION	DATE

Sheet Name

Project Name

Project Number	20427
Date	05/24/2021
Drawn By	MSA
Checked By	PE

M100

GENERAL NOTES:

1. ACCESS DOORS ARE REQUIRED FOR ALL DAMPERS INSTALLED ABOVE INACCESSIBLE CEILINGS. COORDINATE EXACT LOCATION OF ALL ACCESS DOORS WITH ARCHITECT PRIOR TO INSTALLATION.
2. VERIFY LOCATION OF ALL THERMOSTATS WITH ARCHITECT PRIOR TO INSTALLATION. MOUNT ALL THERMOSTATS @48" A.F.F. IN ACCORDANCE WITH ADA STANDARDS. PROVIDE LOCKING COVERS FOR T-STATS.
3. VERIFY AND COORDINATE FRAME AND BORDER TYPE REQUIREMENTS FOR AIR DEVICES WITH ARCHITECTURAL CEILING PLANS PRIOR TO ORDERING.
4. DUCT SIZES SHOWN ARE THE CLEAR INSIDE DIMENSIONS.
5. THE MECHANICAL CONTRACTOR SHALL VERIFY THE LOCATION OF ALL ROOF MOUNTED EQUIPMENT AND ROOF PENETRATIONS WITH ARCHITECT AND STRUCTURAL ENGINEER PRIOR TO COMMENCING WORK.
6. THE MECHANICAL CONTRACTOR SHALL COORDINATE LOCATION AND ROUTING OF HVAC EQUIPMENT AND DUCTWORK WITH OTHER TRADES PRIOR TO COMMENCING WORK.
7. ALL EXHAUST OUTLETS SHALL BE LOCATED MIN. OF 10'-0" FROM ANY OUTSIDE AIR INTAKES.
8. THE CUTTING, NOTCHING AND BORING OF HOLES IN FLOOR JOIST AND WALL STUDS SHALL BE IN ACCORDANCE WITH THE LATEST APPROVED EDITION OF THE INTERNATIONAL BUILDING CODE.
9. CONTRACTOR SHALL BE RESPONSIBLE FOR ALL CUTTING AND PATCHING AS REQUIRED TO ACCOMMODATE HIS WORK.
10. REFER TO THE MECHANICAL DIAGRAMS THAT APPLY TO THE WORK ON THIS DRAWING. THESE DIAGRAMS PROVIDE GUIDANCE AS TO INSTALLATION INTENT AND DO NOT NECESSARILY SHOW ALL COMPONENTS REQUIRED.

SHEET NOTES:

1. ROUTE LIQUID AND SUCTION LINES UP THROUGH ROOF TO CONDENSING UNIT.
2. PROVIDE LIQUID AND SUCTION LINES SIZED AND ROUTED PER MANUFACTURER'S RECOMMENDATIONS.

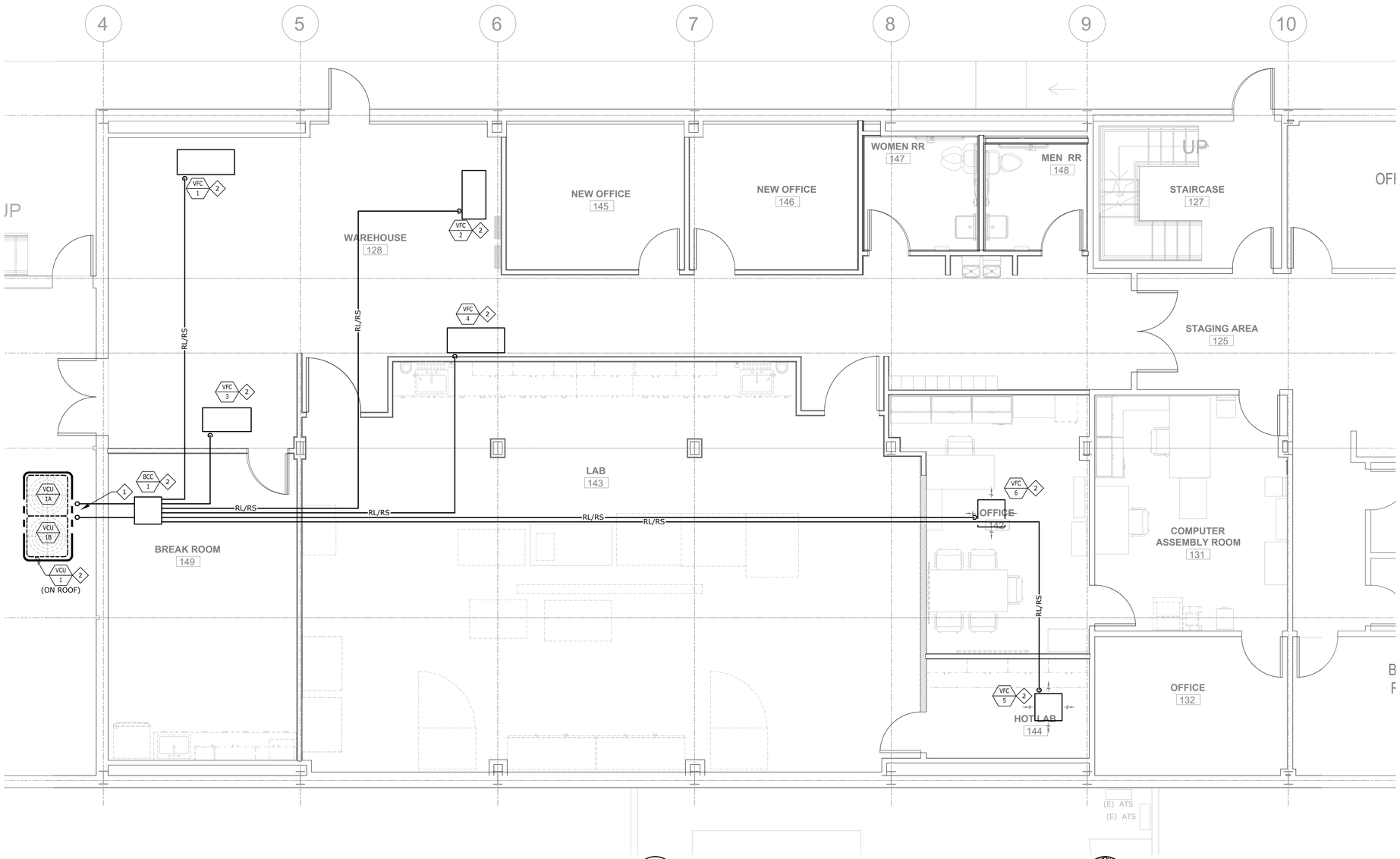

A
M300

MECHANICAL PIPING PLAN
1/4" = 1'-0"

0' 1' 2' 4' 8'

NORTH

PROFESSIONAL ENGINEER - STATE OF NEVADA
DUSTIN T. HART
Exp: 6/30/2023
MECHANICAL
No. 24361

MAY 24 2021

msa
ENGINEERING CONSULTANTS
370 E Windmill Lane, Suite 100
Las Vegas, NV 89123
702.896.1100
msa-ec.com
MSA #L20211

IZ design studio
design...sustainability...architecture.

tel. 702.441.0026
Fax. 702.475.4755
www.izdesignstudio.com

7229 W. Sahara Ave Suite 100
Las Vegas, NV 89117
Nevada

MECHANICAL PIPING PLAN

Southern Nevada Health District

SNHD LAB EXPANSION

700 South Martin Luther King Blvd.
Las Vegas, Nevada 89106

DELTA NO.	REVISION NO.	DESCRIPTION	DATE

Sheet Name

Project Name

Project Number	20427
Date	05/24/2021
Drawn By	MSA
Checked By	PE

M300

GENERAL NOTES:

1. ACCESS DOORS ARE REQUIRED FOR ALL DAMPERS INSTALLED ABOVE INACCESSIBLE CEILINGS. COORDINATE EXACT LOCATION OF ALL ACCESS DOORS WITH ARCHITECT PRIOR TO INSTALLATION.
2. VERIFY LOCATION OF ALL THERMOSTATS WITH ARCHITECT PRIOR TO INSTALLATION. MOUNT ALL THERMOSTATS @48" A.F.F. IN ACCORDANCE WITH ADA STANDARDS. PROVIDE LOCKING COVERS FOR T-STATS.
3. VERIFY AND COORDINATE FRAME AND BORDER TYPE REQUIREMENTS FOR AIR DEVICES WITH ARCHITECTURAL CEILING PLANS PRIOR TO ORDERING.
4. DUCT SIZES SHOWN ARE THE CLEAR INSIDE DIMENSIONS.
5. THE MECHANICAL CONTRACTOR SHALL VERIFY THE LOCATION OF ALL ROOF MOUNTED EQUIPMENT AND ROOF PENETRATIONS WITH ARCHITECT AND STRUCTURAL ENGINEER PRIOR TO COMMENCING WORK.
6. THE MECHANICAL CONTRACTOR SHALL COORDINATE LOCATION AND ROUTING OF HVAC EQUIPMENT AND DUCTWORK WITH OTHER TRADES PRIOR TO COMMENCING WORK.
7. ALL EXHAUST OUTLETS SHALL BE LOCATED MIN. OF 10'-0" FROM ANY OUTSIDE AIR INTAKES.
8. THE CUTTING, NOTCHING AND BORING OF HOLES IN FLOOR JOIST AND WALL STUDS SHALL BE IN ACCORDANCE WITH THE LATEST APPROVED EDITION OF THE INTERNATIONAL BUILDING CODE.
9. CONTRACTOR SHALL BE RESPONSIBLE FOR ALL CUTTING AND PATCHING AS REQUIRED TO ACCOMMODATE HIS WORK.
10. REFER TO THE MECHANICAL DIAGRAMS THAT APPLY TO THE WORK ON THIS DRAWING. THESE DIAGRAMS PROVIDE GUIDANCE AS TO INSTALLATION INTENT AND DO NOT NECESSARILY SHOW ALL COMPONENTS REQUIRED.

SHEET NOTES:

1. LOCATE CONDENSING UNIT IN SAME LOCATION AS DEMOLISHED ROOFTOP UNIT. PROVIDE WITH MIRO 6-HD MECHANICAL SUPPORT STRUCTURE, OR EQUAL. FIELD VERIFY EXACT LOCATION AND REQUIREMENTS PRIOR TO COMMENCING WORK.
2. PROVIDE LIQUID AND SUCTION LINES SIZED AND ROUTED PER MANUFACTURER'S RECOMMENDATIONS.
3. ROUTE LIQUID AND SUCTION LINES DOWN THROUGH ROOF.

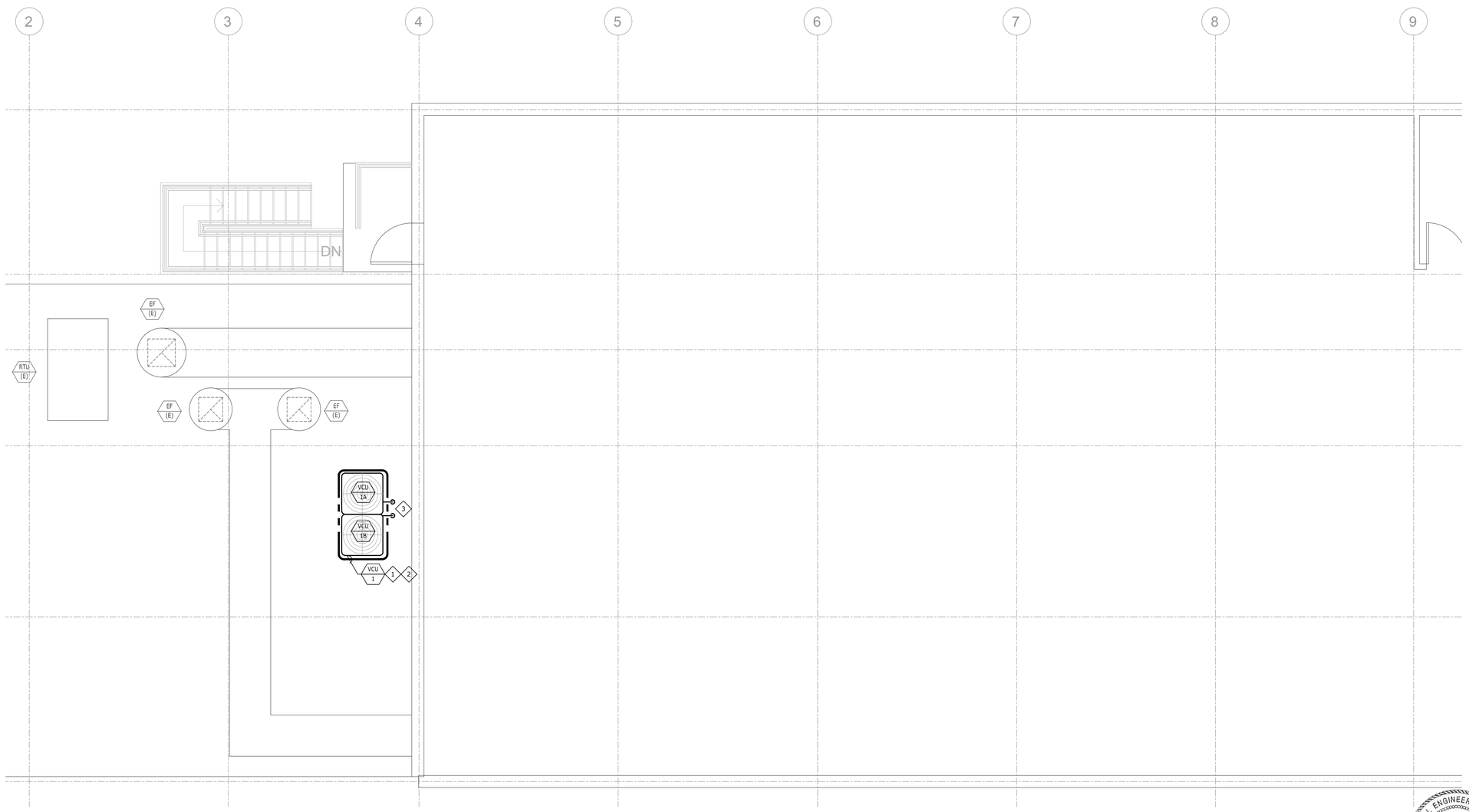

A
M400

MECHANICAL SECOND FLOOR - LOW ROOF PLAN
1/4" = 1'-0"

0' 1' 2' 4' 8'

NORTH

PROFESSIONAL ENGINEER - STATE OF NEVADA
DUSTIN T. HART
Exp: 6/30/2023
MECHANICAL
No. 24361

MAY 24 2021

msa
ENGINEERING CONSULTANTS
370 E Windmill Lane, Suite 100
Las Vegas, NV 89123
702.896.1100
msa-ec.com
MSA #L20211

IZ design studio
design...sustainability...architecture.

tel. 702.441.0026
Fax. 702.475.4755
www.izdesignstudio.com

7229 W. Sahara Ave Suite 170
Las Vegas, NV 89117 Nevada

MECHANICAL SECOND FLOOR - LOW ROOF PLAN
Southern Nevada Health District
SNHD LAB EXPANSION
700 South Martin Luther King Blvd.
Las Vegas, Nevada 89106

DELTA NO.	REVISION NO.	DESCRIPTION	DATE

Sheet Name
Project Name

Project Number	20427
Date	05/24/2021
Drawn By	MSA
Checked By	PE

M400